TECHNICAL MANUAL 2020

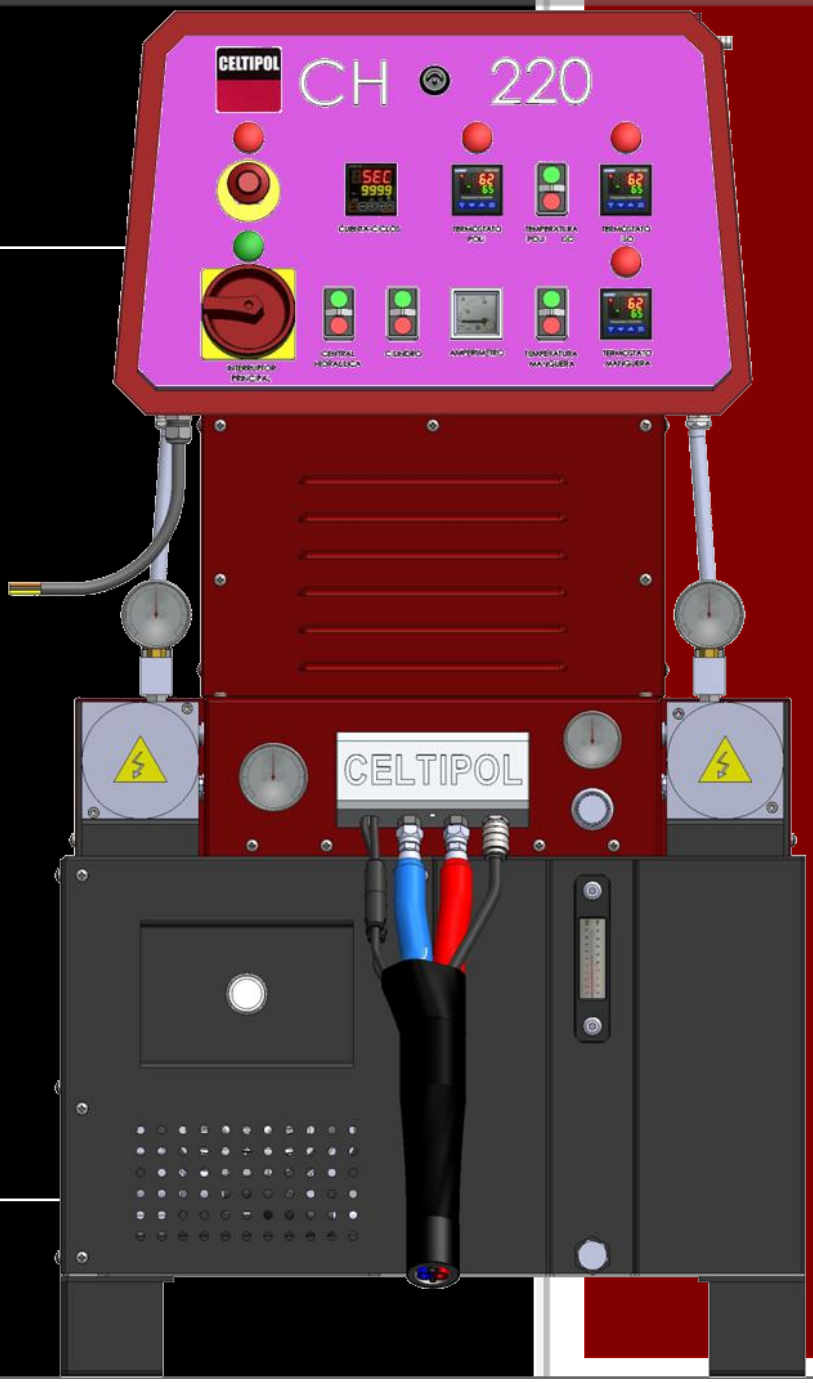

CH-220 B

HYDRAULIC SYSTEM FOR SPRAYING POLYURETHANE, POLYUREAS AND BI-COMPONENTS

CELTIPOL

TABLE OF CONTENTS:

1. GENERAL CONDITIONS.

Before installing and starting up the Machine, read all the technical and safety documentation included in this manual carefully. It is important to pay particular attention to the information included here in order to become acquainted with handing and operating conditions of the Unit. All information is focused on bolstering User Safety and avoiding any possible breakdown arising from the incorrect use of the Unit.

Careful reading of this Technical Manual will give you a better knowledge of the system and procedures. Following the instructions and recommendations included here will reduce the potential risk of accident during installation, use or maintenance of the Machine, and will make it possible to have an incident-free operation for a longer period of time, better performance and the possibility to detect and solve problems in a swift and simple manner.

Keep this Technical Manual. You will be able to make consultations in the future, with access to useful information at all times. In the event of misplacing the manual, please request a copy from Celtipol.

The design of the Machine does not allow for it to be used in potentially explosive environments. Nor should the pressure and temperature limits stipulated in the technical specifications in this manual be surpassed.

2. SAFETY CONDITIONS

The first consideration to take into account is that during the design and project stage of the CHV-320 pneumatic machine, the regulations in force regarding machine Safety and Prevention of Risk in the Work Place have been scrupulously respected. Therefore, we can firmly state that the machine is intrinsically safe.

Nevertheless, in common with any machine or tool, incorrect use of the same may cause more or less hazardous situations. These recommendations have been drafted to avoid such situations to ensure safe use and handling of the system.

Leading on from the above, clearly, all personnel that have anything to do with the spraying and handling operations of the machine must have an in-depth knowledge of these recommendations as well as all other recommendations that may be provided by the manufacturers of chemical products.

Throughout these operations, the intention is to provide a non-exhaustive list of the possible risks that may arise from spraying operations. For this reason, and depending on each particular application, it must be the user of the system who should carefully study the risks arising from the same, in line with the Regulation in force on the Prevention of Risks in the Work Place.

Another aspect for consideration is the prevention of possible risks arising from the use of different chemical products, some of which may be hazardous if used incorrectly. Special attention should be paid to any fumes issued during use of polyurethane foam and polyurea systems since isocyanate compounds are used in spraying operations.

In short, to ensure that the handling and use of the spraying equipment is as safe as possible, the user must strictly follow the following aspects indicated in this manual.

3. APPLICATION SAFETY.

• It is advisable for personnel with a history of respiratory complaints to avoid exposure to all isocyanates.

• Chemical products must be handled safely in accordance with manufacturer's recommendations. The manufacturer should provide information on the toxicity of the products used as well as actions to take in the event of accident (wounds, irritation, etc.).

• It should be taken into account that solvents that may be used in cleaning operations may also entail additional risk during handling.

• Do not apply until adequate ventilation is ensured, either naturally or forced, if required. Suppliers of chemical products must be applied to in order to determine the values at which the concentrations of fumes may be hazardous.

• The appropriate procedures and systems must be applied to detect hazardous concentrations of fumes.

• In the event of not being able to ensure appropriate ventilation, both the personnel applying substances and those working in the area influenced by fumes must, without fail, use certified breathing apparatus.

• At all times, users must use the appropriate personal protection equipment (gloves, breathing masks, goggles, protective clothing, etc.).

• Users must be completely familiar with the chemical products and with the use of the equipment.

- In order to prevent any possible bodily harm caused by incorrect handling of raw materials and solvents used in the process, please read carefully the safety information provided by the supplier.
- Treat waste according to the regulations in force.
- Electrical maintenance of the machine must only be conducted by a qualified electrician.
- In order to avoid damage caused by the impact of pressurized fluids, do not open any connection or carry out any maintenance work on components under pressure until the pressure has been completely eliminated.
- Use appropriate protection for operating, maintenance work or whenever present in the working area of the Machine. This includes but is not limited to the use of a face mask, goggles, gloves, footwear and safety clothing.
- Certain components of the Machine reach temperatures that can cause burns. Do not handle or touch the hot parts in the Machine until they have cooled down.
- In order to prevent any serious harm due to crushing or amputations, do not work with the Machine without safety protection from duly installed moving parts. Make sure that all safety protection is correctly fitted when completing repairs or maintenance work.

4. SAFE HANDLING OF CHEMICAL PRODUCTS.

Products such as polyisocianates, organic solvents and diamines should be stored in a place exclusively for and adapted to such a purpose, with restricted access. Maximum temperatures must be strictly adhered to, both in the application and in storage of chemical products, at all times following the manufacturer's recommendations.

• Also, chemical products are to be stored at all times in suitable containers, following the manufacturer's recommendations.

• Containers must not be opened until immediately before being used in order to avoid contamination by damp. Any leftover product after being applied should be put back into the original container and be stored in a dry, ventilated place.

• During cleaning tasks of spilt components, it will be essential to use eye protection, gloves and wearing breathing apparatus. Spilt isocyanate can be collected with any absorbent inert product, such as sawdust. In any case, it is important to avoid skin contact. The absorbent product is to be immediately collected and dumped into an open container through the upper part.

• Throughout the entire operation explained above, the area must be correctly ventilated.

Safety personnel equipment:

Celtipol recommends the following personnel safety equipment for operations with foaming (see table):

- **Protective mask for airways.**
- **Goggles to protect the eyes.**
- **Headset to protect against noise.**
- **Gloves to protect hands.**
- **Protective clothing for the body.**

5. EQUIPMENT TECHNICAL SHEET.

HIDRAULIC EQUIPMENT CH220 B	
1.Technical characteristics:	
PREHEATER POWER	18.000 W
TRANSFORMER POWER	6.000 W
ELECTRIC ENGINE POWER	5.5 Kw (7 HP)
INSTALLED POWER	29.500 W
WORK PRESSURE	200 bares
ADMISIBLE HOSE LENGTH	90 Ml
MAXIMUM PRODUCTION	12,5 l/min 15 kg/min
WEIGHT OF THE MACHINE	with no oil 260 Kg – with oil 330 Kg
DIMENSIONS (width x depth x height)	730x860x1290 mm
2.EQUIPMENT AND SYSTEMS:	
➢ SLAVE LUBRICATION PUMP DURING WORK OF THE MACHINE.	
➢ IN AN EMERGENCY SITUATION, IT CAN OPERATE WITHOUT TRANSFER PUMPS.	
➢ AIR DISTRIBUTOR WITH THREE OUTLETS.	
➢ AIR PRESSURE REGULATOR IN PUMPS AND GUN.	
➢ DIGITAL AUTOMATIC CONTROLLER FOR TEMPERATURES IN PREHEATERS AND HOSE.	
➢ AUTOMATIC BLOCKING SYSTEMS ACTIVATED BY EXCESS PRESSURE OR TEMPERATURE.	
➢ CONSUMPTION AMMETER FOR THE HOSE.	
➢ CYCLE COUNTER WITH PROGRAMMED BLOCKING PRESELECT.	
➢ PROTECTION FILTERS FOR INCOMING PRODUCTS.	
➢ MEMORIZATION OF TEMPERATURES AND PRESSURES.	

6. OVERVIEW.

- **FRONT**

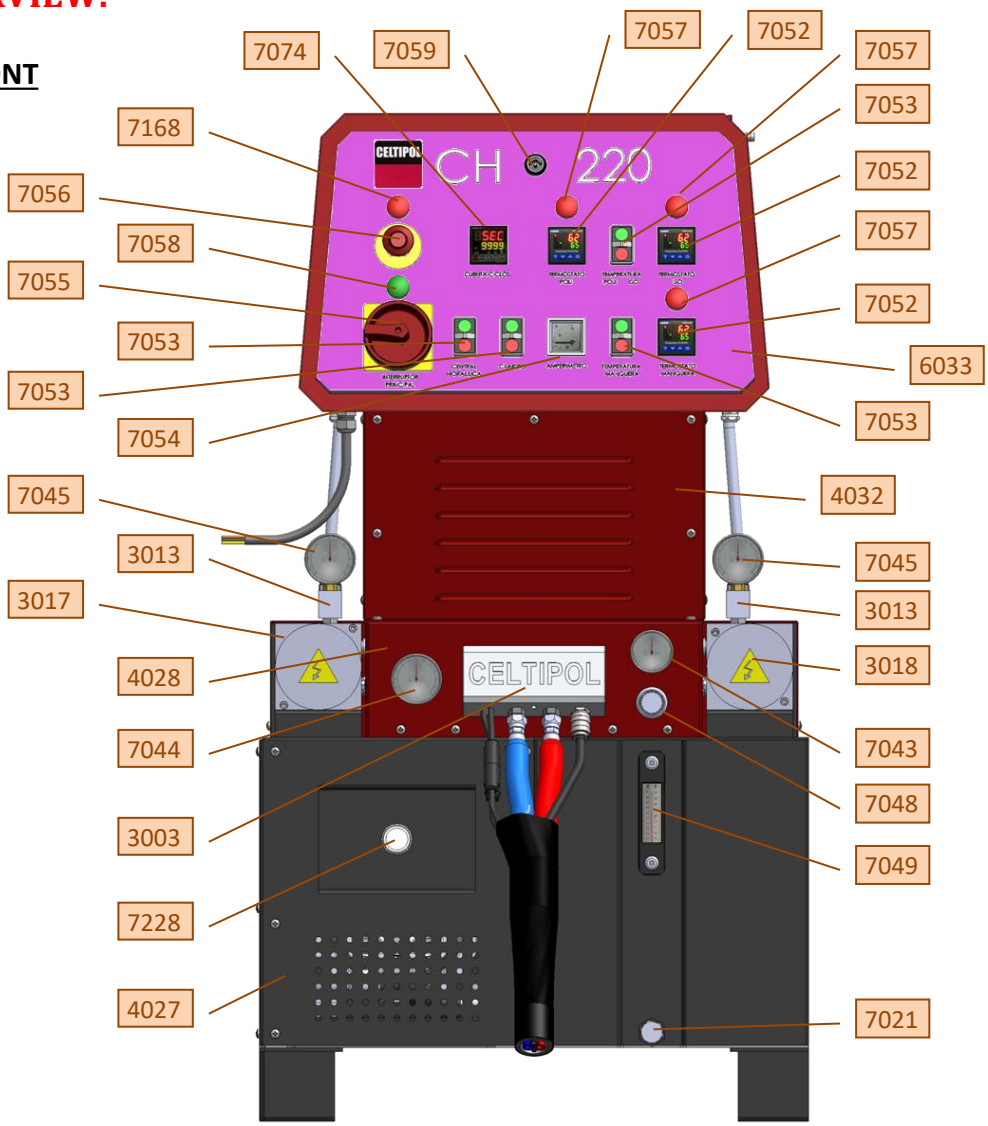

REF.	DESCRIPTION
3003	Hose outlet unit
3013	Pressure Gauge - Pr Switch Coupling
3017	Right heater cover
3018	Left heater cover
4027	Engine ventilation grill
4028	Front housing
4032	Transformer cover
6033	Control cover
7021	Plug 1/2”
7043	Air pressure gauge
7044	Hydraulic oil pressure gauge
7045	Product hydraulic pressure gauge
7048	Air regulator 1/4”

REF.	DESCRIPTION
7049	Thermometer-Level
7052	Temperature Controller
7053	Start / Stop button
7054	Ammeter
7055	3x63A general switch
7056	Emergency stop
7057	Red signal light
7058	Green signal light
7059	Electric cabinet lock
7074	Cycle counter
7168	RESET button with red signal light
7228	Hydraulic pressure regulator

- **REAR**

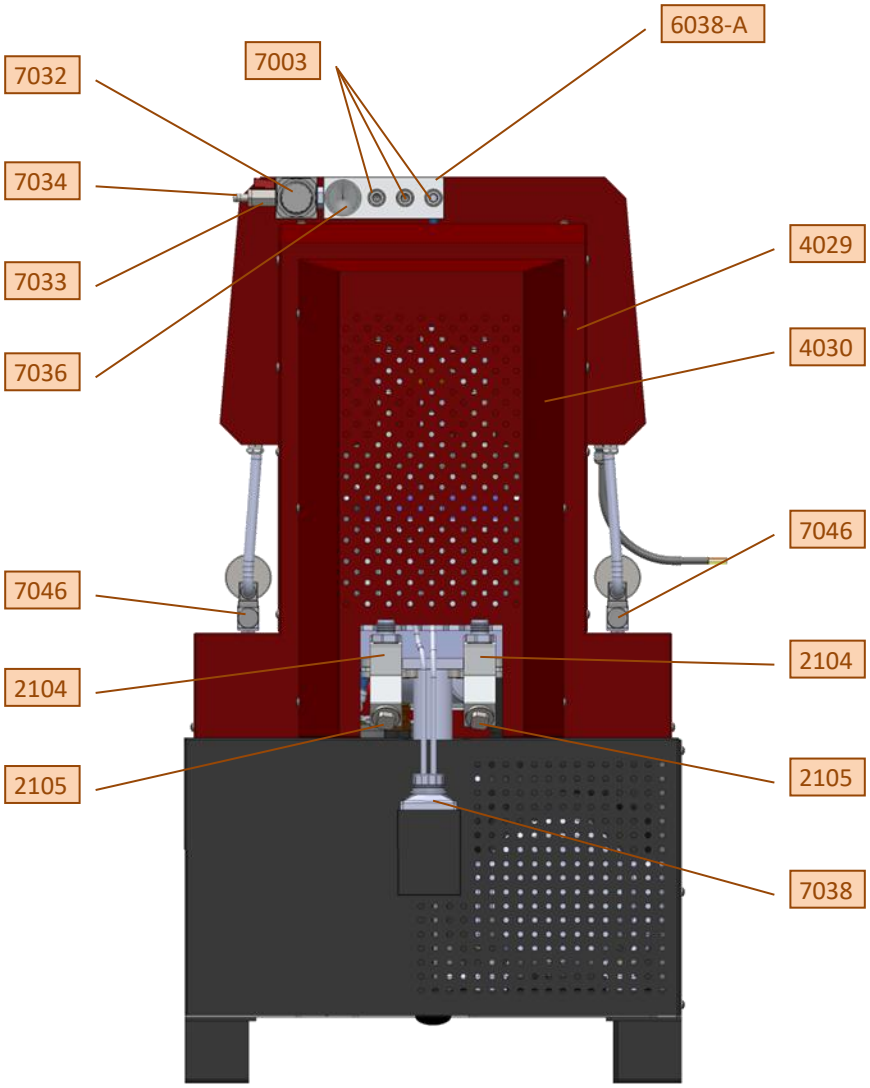

REF.	DESCRIPTION
2104	Filter body
2105	Filter holder
4029	Back housing
4030	Back cover
6038-A	Air distributor
7003	Quick connector
7032	Air pressure regulator MC202-R00
7033	Valve 1/2”
7034	Hose barb fitting 1/2
7036	Air regulator filter pressure gauge
7038	Lubrication Liquid Bottle
7046	Pressure switch

7. REMOVED HOUSES.

- **RIGHT SIDE:**

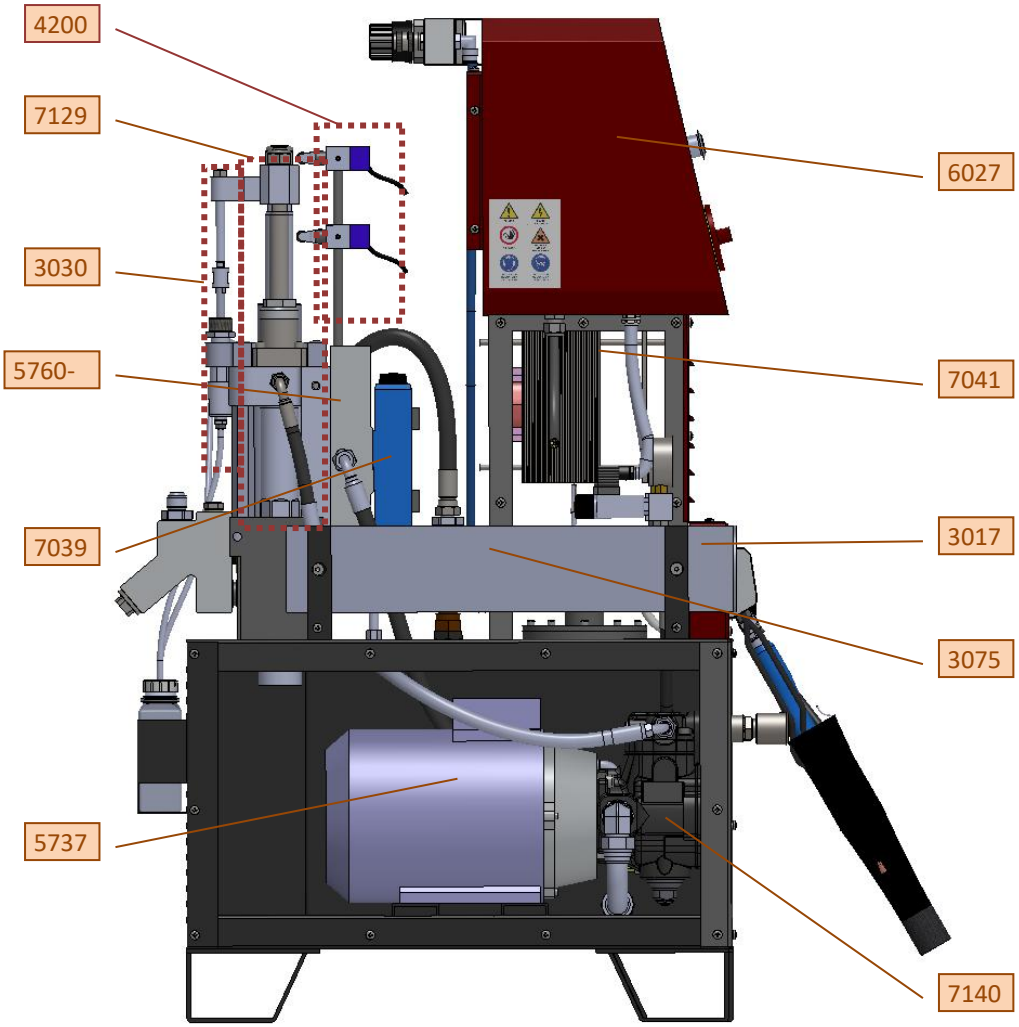

REF.	DESCRIPTION
3017	Right heater cover
3030	Lubrication pump
3075	Polyol heater
4200	Limit switch set
5737	Motor 5.5 Kw (7.3 Hp)
5760-A	Solenoid valve base plate
6027	Control cabinet
7039	Solenoid valve
7041	Transformer
7129	Pumping group block
7140	Pump PHP 1 20-25-32 FHRM

- **LEFT SIDE:**

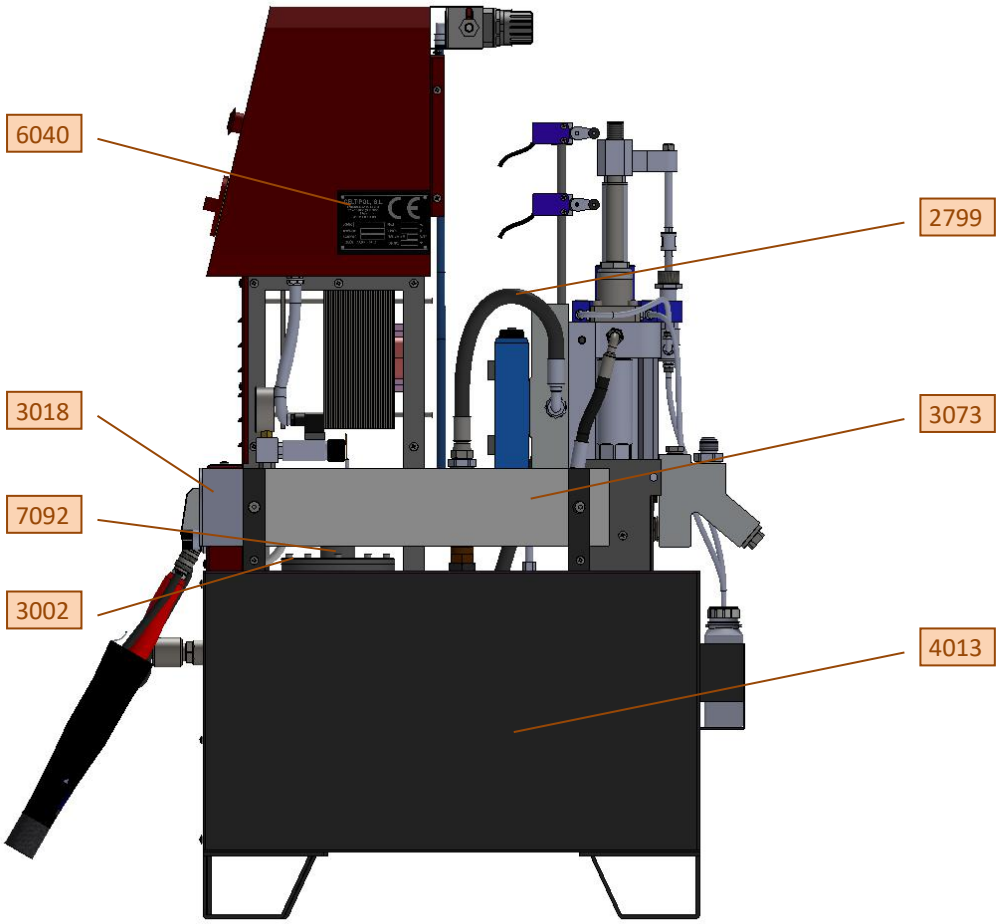

REF.	DESCRIPTION
2799	Tank return sleeve
3002	Manhole cover
3018	Left heater cover
3073	Isocyanate Heater
4013	Tank
6040	Identification plate
7092	Oil filler cap

- **TOP VIEW:**

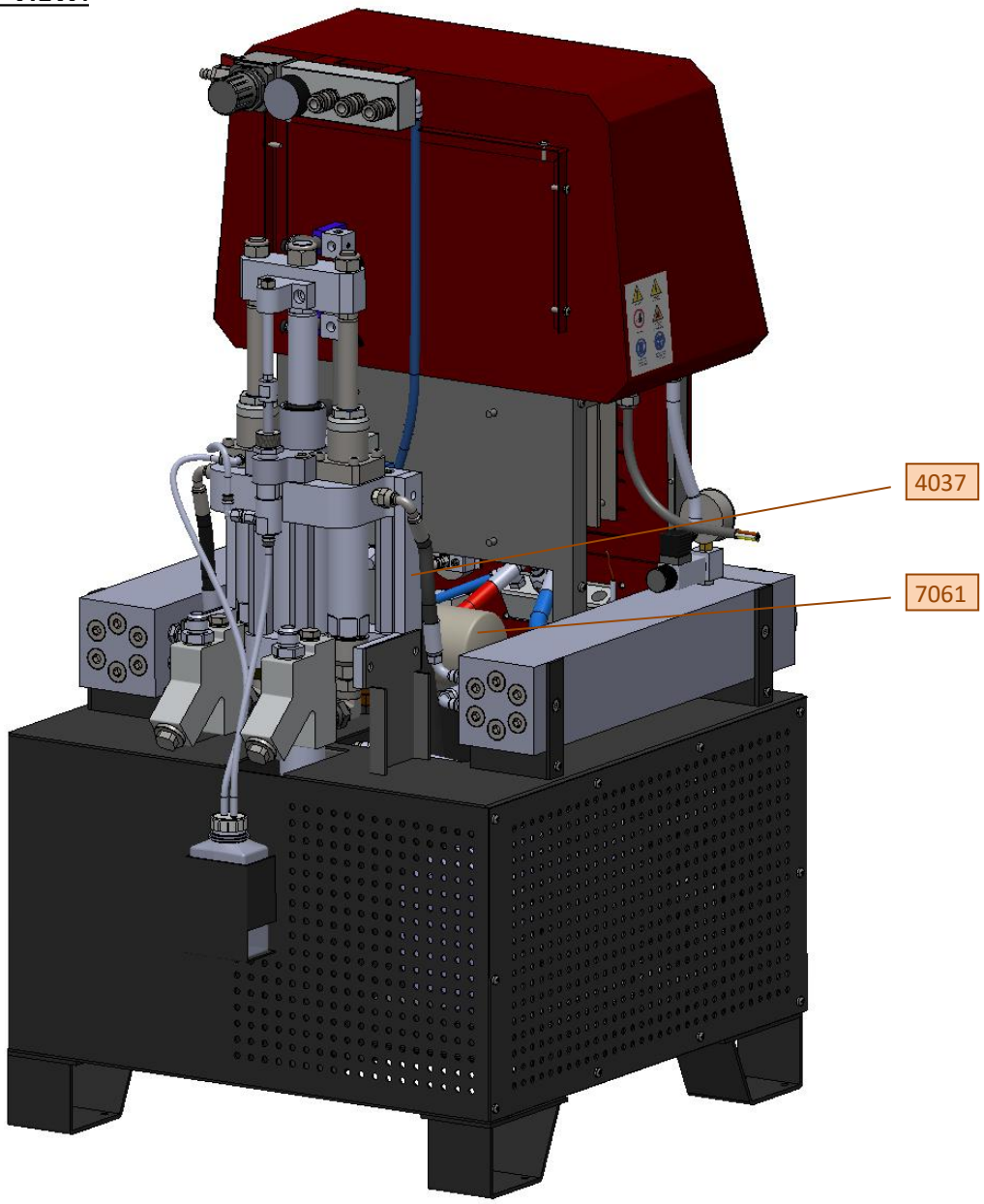

REF.	DESCRIPTION
4037	Pump group support
7061	Oil filter

8. PUMPING GROUP EXPLODED VIEW 7129.

REF.	DESCRIPTION
2100	Liquid filter set
3026-A	Hexagonal pillar
3030	Lubrication pump
4709	M12 self-locking nut
5611	M24 self-locking nut
5612	M18 self-locking nut
5729	Stem joint
5760-A	Solenoid valve base plate
7022	Waterproof washer 1/2”
7030	3/8”G connector
7035	M-M 1/2” Gas connector
7039	Electroválvula
7063	90º M3/4” – F3/4” elbow
7096	M 3/4”–M 1/2” Gas reduction

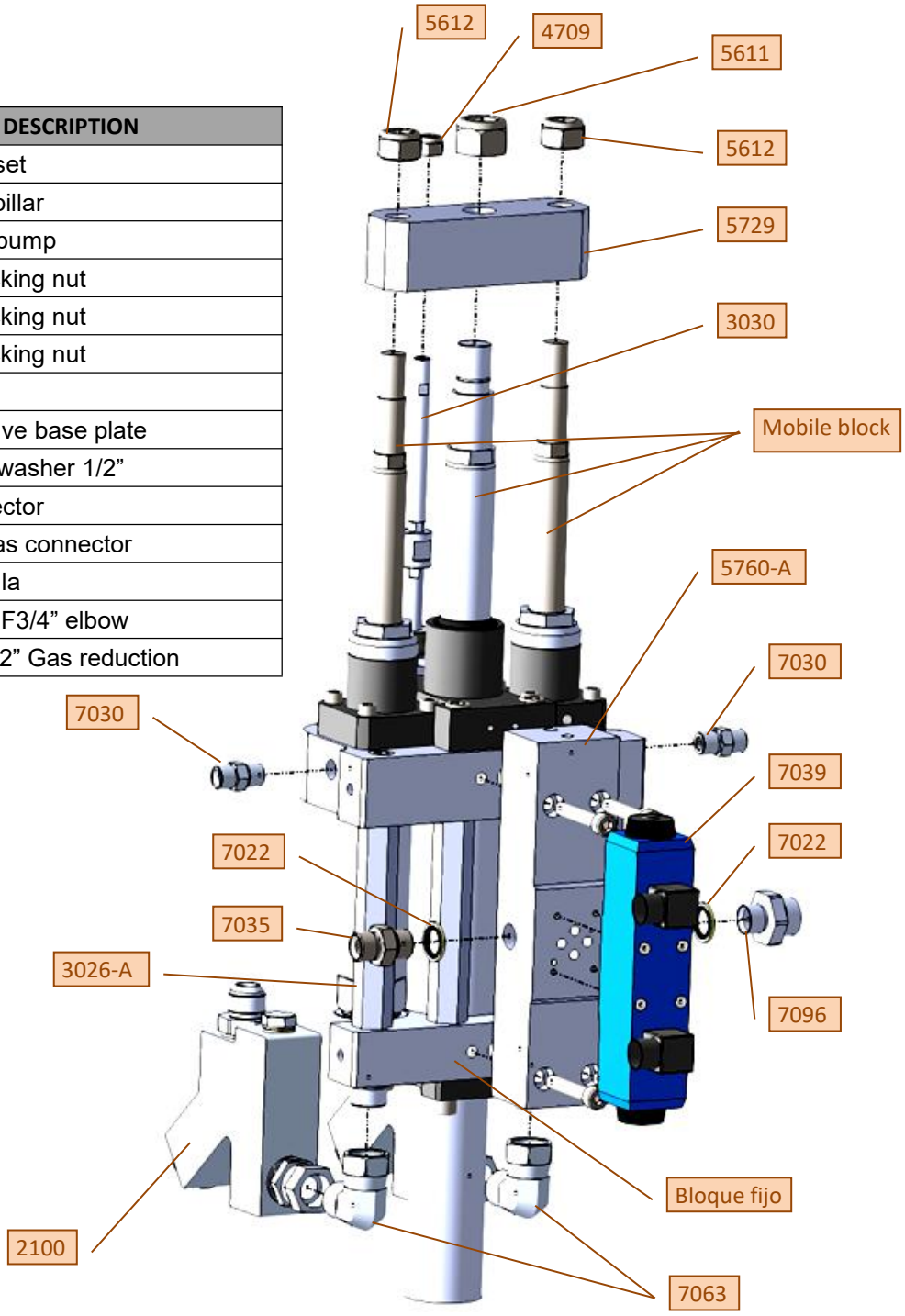

- **3030 LUBRIFICATION PUMP EXPLODED VIEW :**

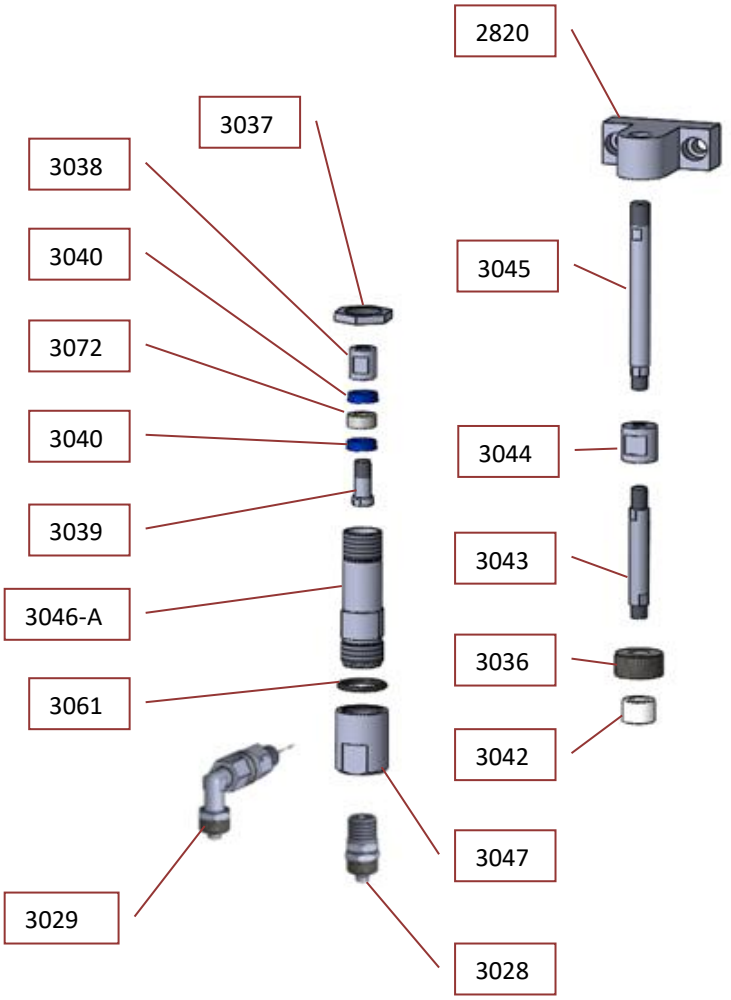

Nº	DESCRIPCIÓN
2820	Pump release
3028	Input non-return valve
3029	Output non-return valve
3036	Upper cover
3037	Retaining nut
3038	Piston rod-piston joint
3039	Piston bracket
3040	Piston seal
3042	Stop guide
3043	Lower Piston rod
3044	Piston rod joint
3045	Upper Piston rod
3046-A	Cylinder body
3047	Pump base
3061	O-ring
3072	Piston guide

SPARE KIT (2204)	
3040	Piston seal x 2
3042	Stop guide
3061	O-ring
3072	Piston guide

- **3028 Input non-return valve:**

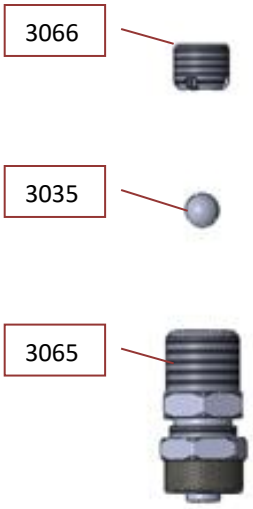

Nº	DESCRIPTION
3035	Sphere d6
3065	Fitting
3066	Stop 1/8”

- **3029 Output non-return valve:**

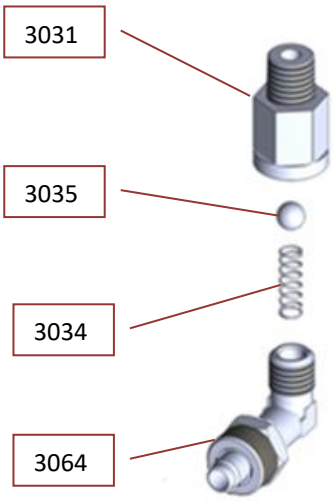

Nº	DESCRIPTION
3031	Stop
3034	Spring d5
3035	Sphere d6
3064	Output connection

- **7130 FIXED BLOCK.**

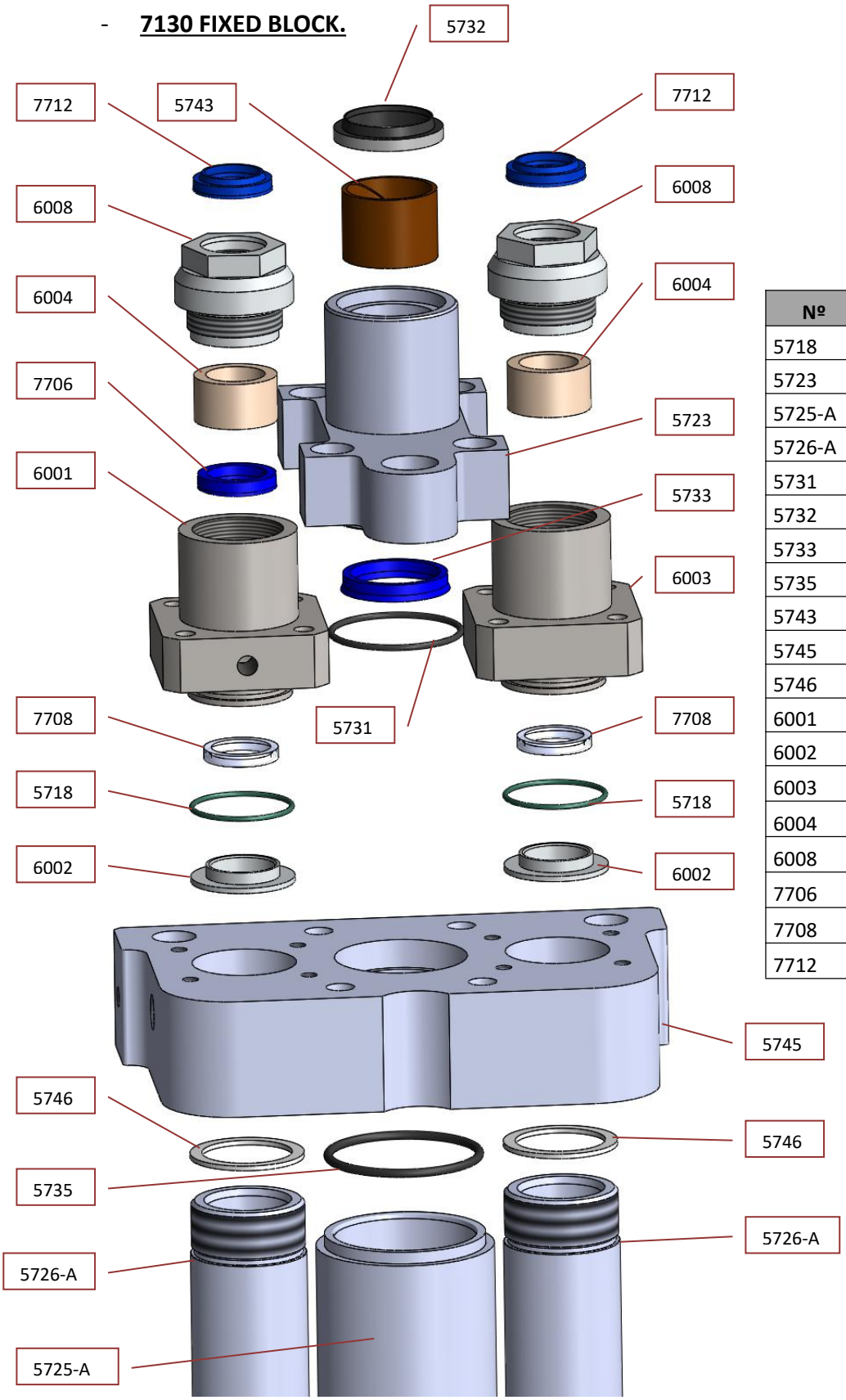

Nº	DESCRIPTION
5718	O-ring
5723	Upper cylinder head
5725-A	Cylinder body
5726-A	Pump cylinder body Ø35
5731	O-ring
5732	Wiper seal
5733	Rod seal
5735	O-ring
5743	Rod guide ring
5745	Upper cylinder head plate
5746	Nylon ring
6001	ISO head
6002	Seal stop ring
6003	POLI head
6004	Nylon rod guide
6008	Seal and hosing Wiper seal
7706	Rod seal
7708	Buffer seal
7712	Wiper seal

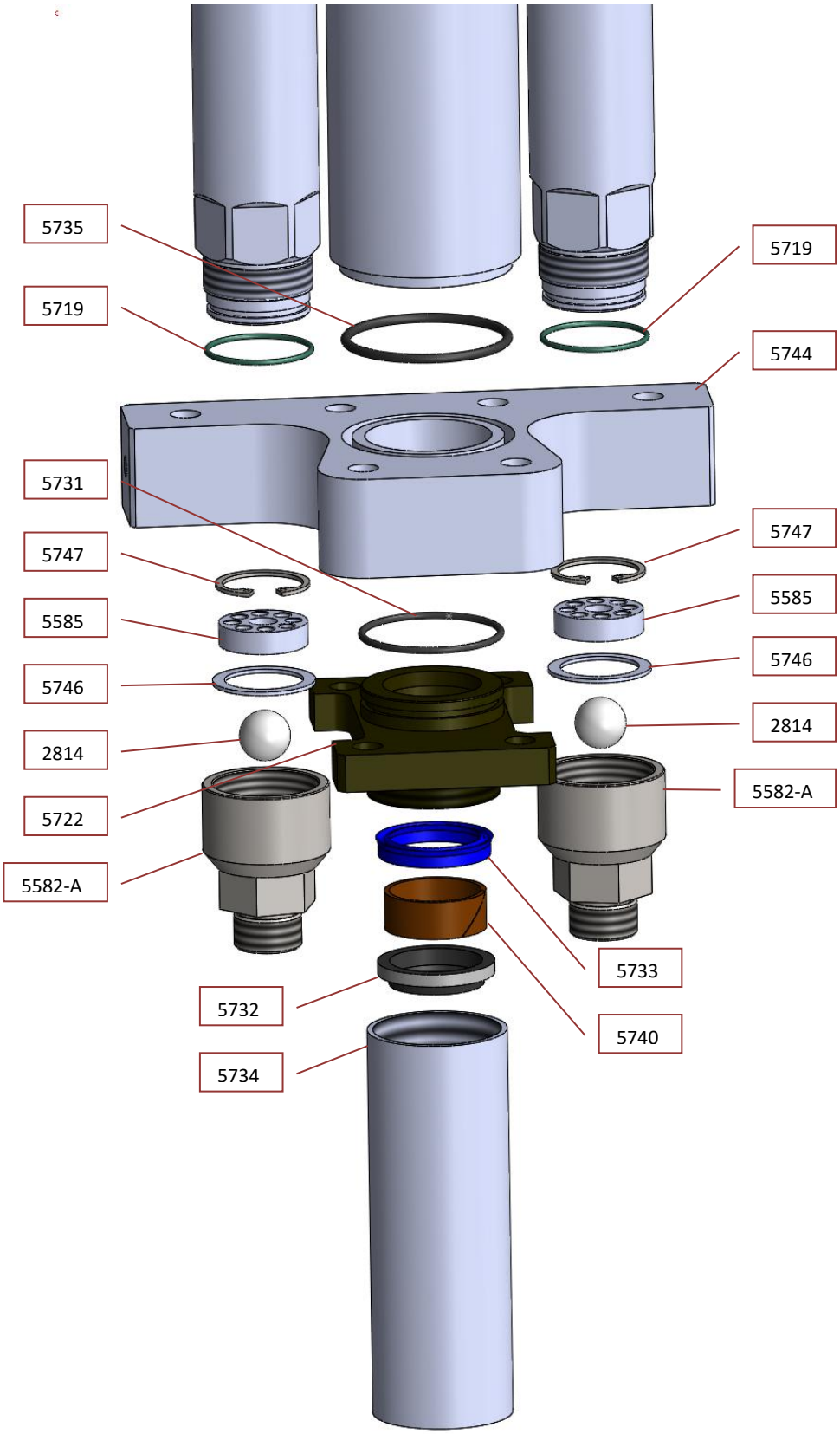

Nº	DESCRIPTION
2814	Sphere d25
5582-A	Bottom base
5585	Pump disk d35
5719	O-ring
5722	Bottom cylinder head
5731	O-ring
5732	Wiper seal
5733	Rod seal
5734	Stem protector
5735	O-ring
5740	Rod guide ring
5744	Lower cylinder head plate
5746	Nylon ring
5747	Safety ring

SPARE KIT (2201)	
5718	O-ring
6004	Nylon rod guide
7706	Rod seal
7712	Wiper seal
7708	Buffer seal

Ø 35 PUMP:

- **7132 MOBILE BLOCK.** Stem – pump piston: Iso/Poly

Nº	DESCRIPTION
5706	Piston
5707	Lower piston stop
5708	Ø14 Sphere
5730	Pump stem
5765	Varisel buffer seal
5768	Guide and Piston seal housing
5769	Piston guide

SPARE KIT (2202)	
5765	Varisel buffer seal x 2
5769	Piston guide

Ø 60 PUMP:

Piston–rod set

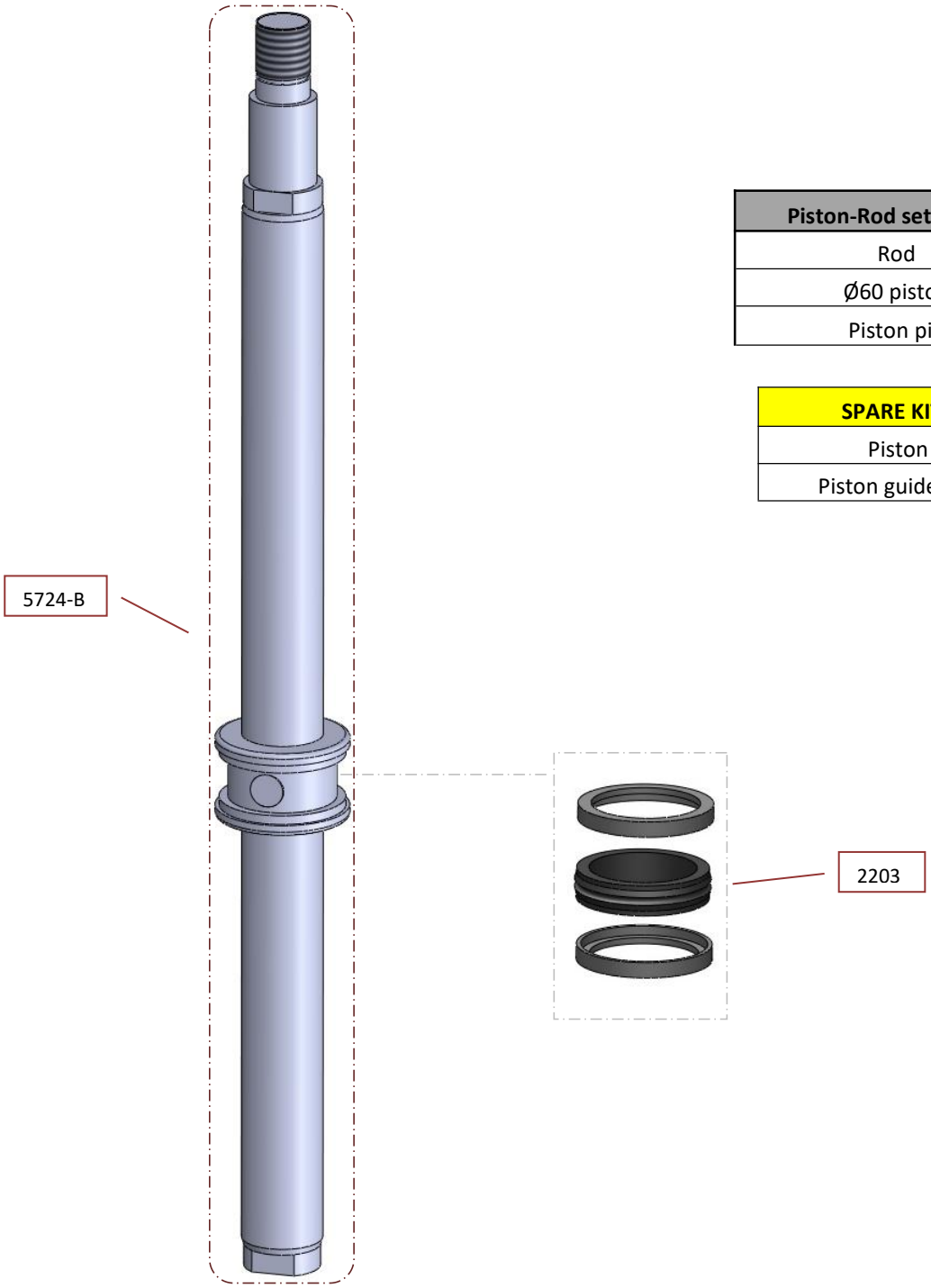

Piston-Rod set 5724-B
Rod
Ø60 piston
Piston pin

SPARE KIT (2203)
Piston seal
Piston guide Ø60 x 2

9. LIQUID FILTER EXPLODED VIEW.

2100 LIQUID FILTER SET EXPLODED VIEW.

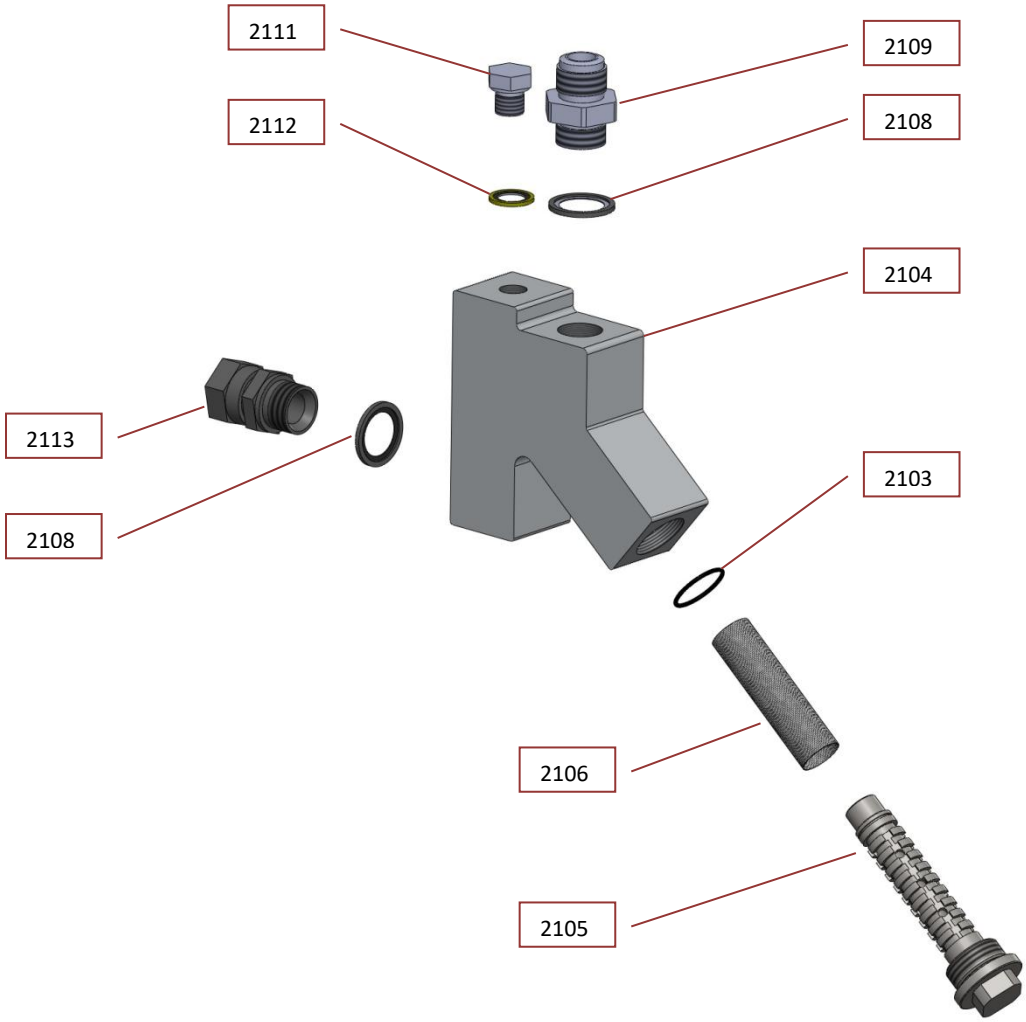

Nº	DESCRIPTION
2103	O-ring
2104	Filter body
2105	Filter holder
2106	Filter
2108	Watertight washer 3/4”
2109	M3/4” – M1 1/16” Joint
2111	Plug 3/8”
2112	Watertight washer 3/8”
2113	M3/4” - F3/4” Joint

SPARE KIT (2208)	
2103	O-ring Øint 30 x 2
2106	Filter

10. LIQUID HEATER EXPLODED VIEW.

3070 POLY/ISO LIQUID HEATER EXPLODED VIEW.

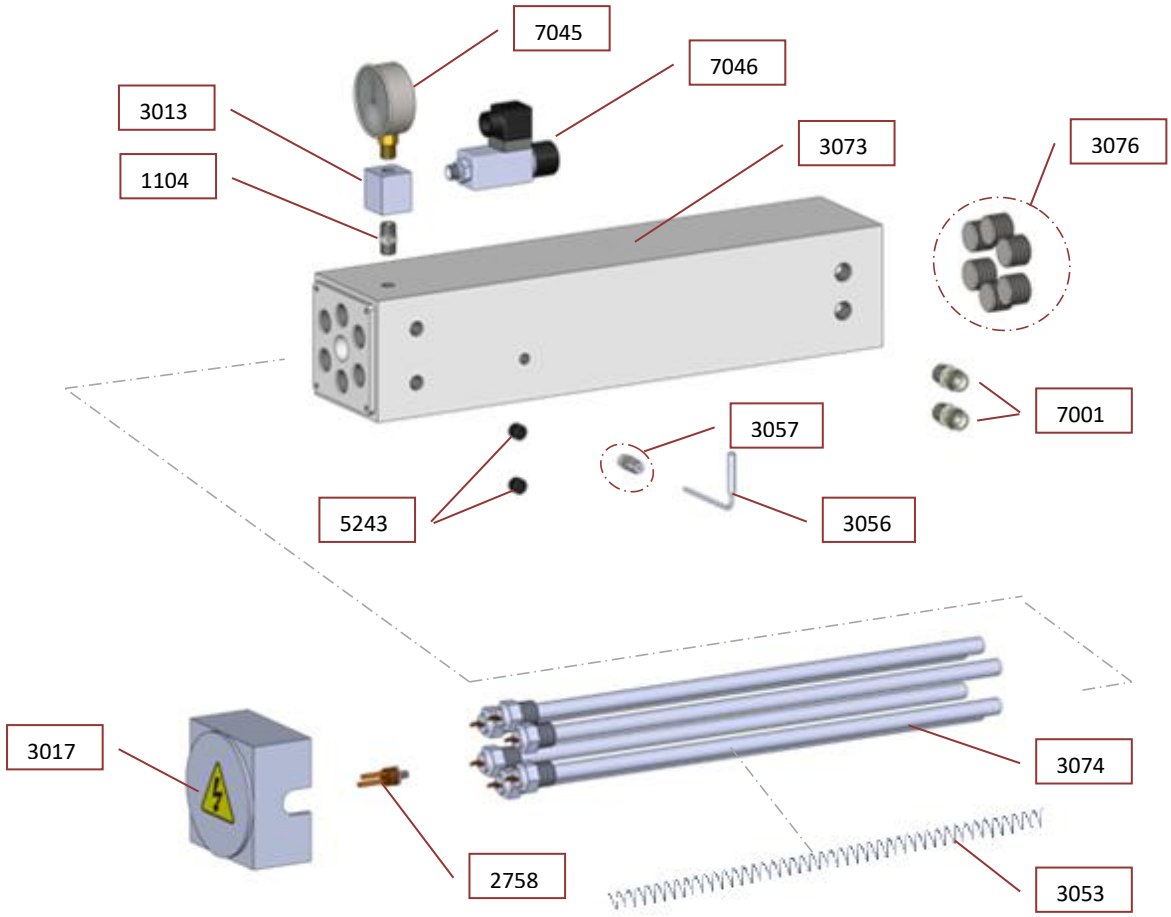

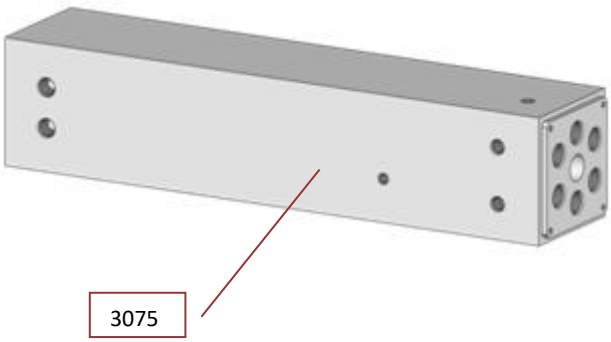

REF.	DESCRIPTION
1104	NPT1/4" joint
2758	Thermostat
3013	Pressure Gauge - Pressure Switch Coupling
3017	Heater cover
3053	Ø14 Spring for resistance
3056	Thermocouple probe
3057	Probe connector
3073	Left heater block ISO
3074	Ø14x485 1500W (x6) resistance
3075	Right heater block POLY
3076	3/4"NPT (x6) plugs
5243	1/4"NPT (x5) plugs
7001	NPT3/8" - G3/8" joint
7045	Pressure Gauge
7046	Pressure switch

11. LIMIT SWITCH SET.

4200 MECHANICAL LIMIT SWITCH SET

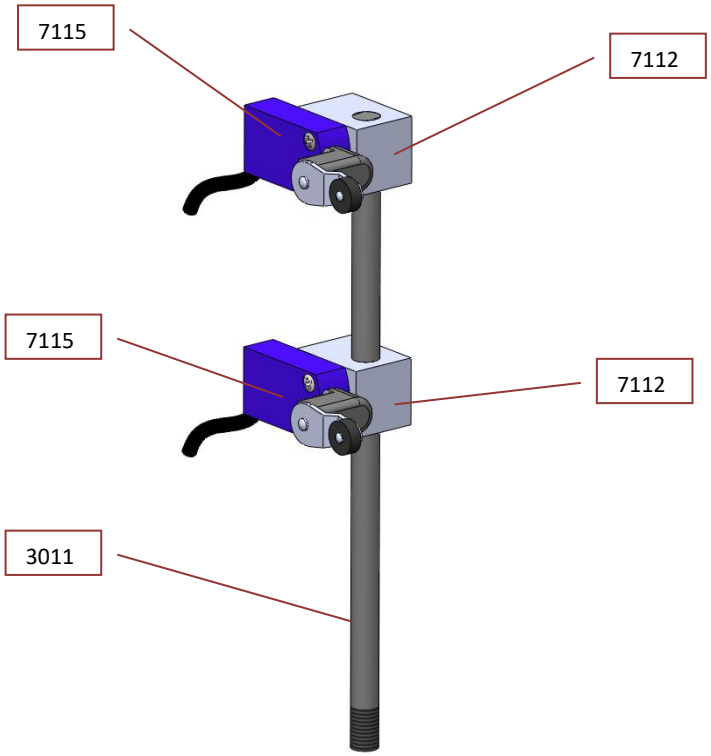

Nº	DESCRIPTION
3011	Vertical bracket
7112	Limit switch bracket
7115	Mechanical limit switch

12. HOSE.

8110 MACHINE CONNECTION STRETCH

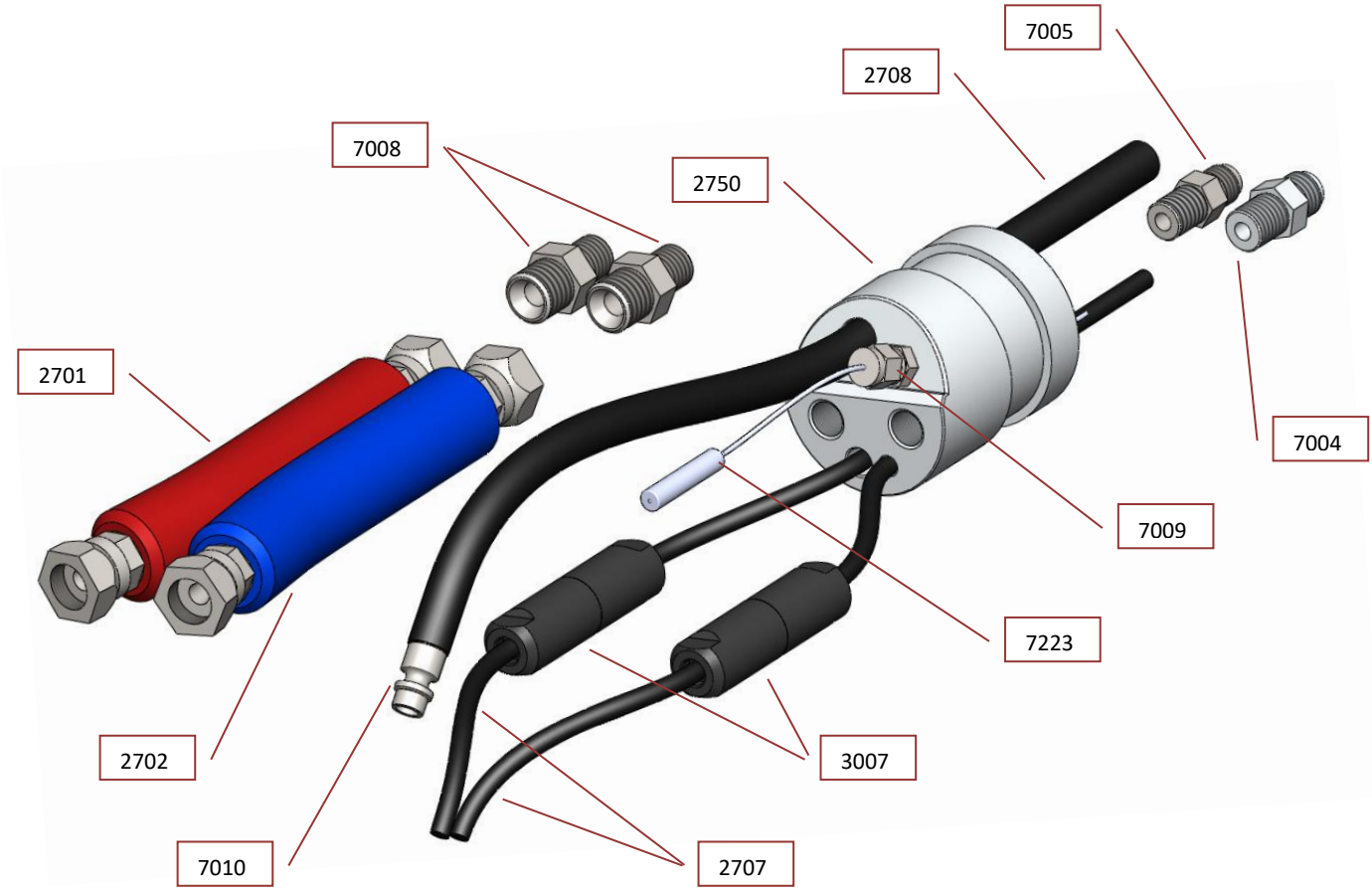

Ref.	DESCRIPTION
2701	ISO line
2702	POLY line
2707	Hose wire
2708	Hose air conduit (tube Ø6)
2750	Anterior connecting block
3007	Electrical connectors
7004	M 1/4”NPT – M 1/2”SAE joint
7005	M 1/4”NPT – M 9/16”SAE joint
7008	M 1/4”NPT- M 3/8”gas joint
7009	Probe connector unit
7010	Swift air connector male
7223	Temperature probe

8130 HOSE FITTING.

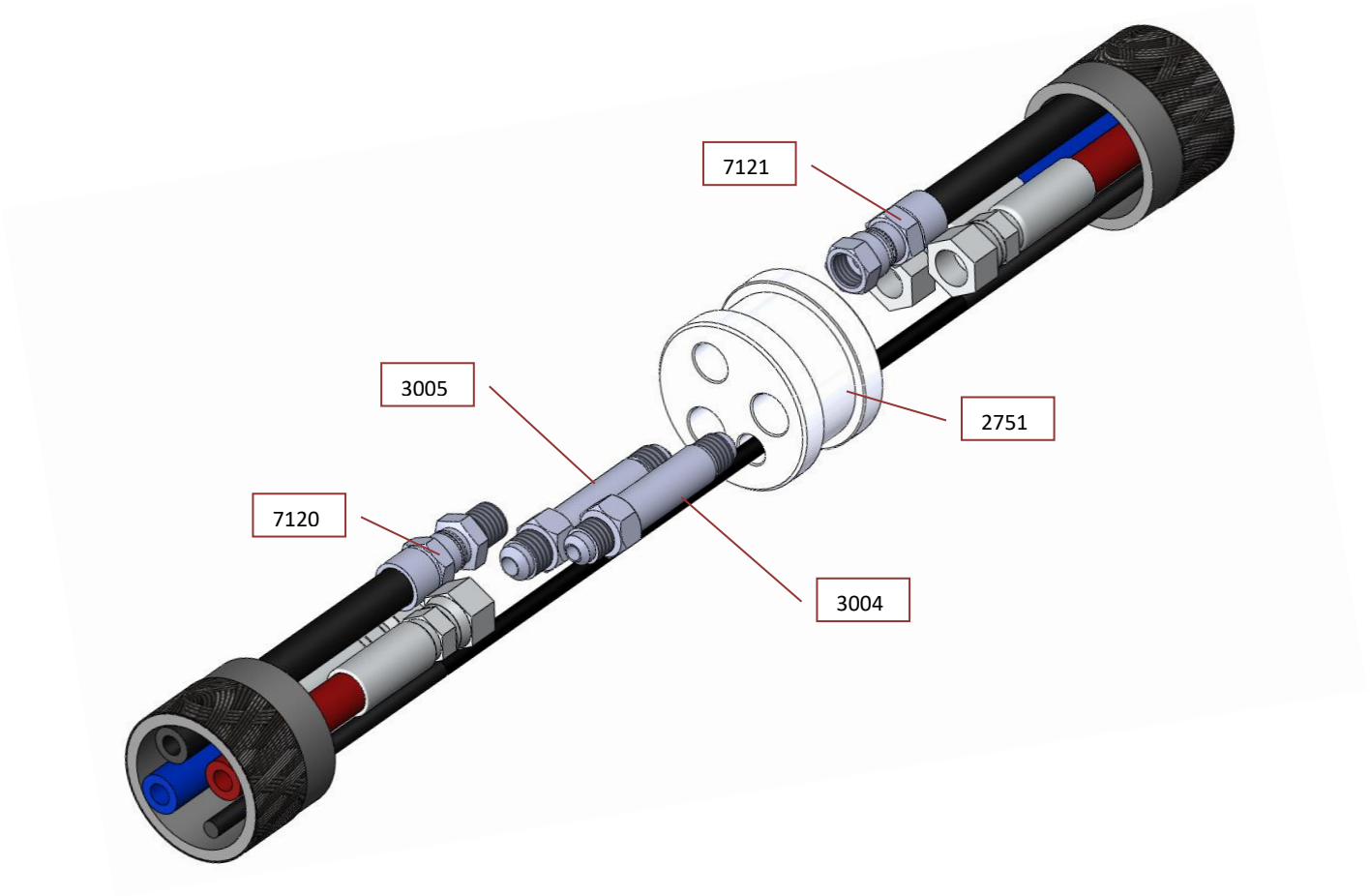

Ref.	DESCRIPTION
2751	Insulator separator
3004	ISO hose fitting
3005	POLY hose fitting
7120	Male air connector
7121	Female air connector

8120 GUN CONNECTION STRETCH.

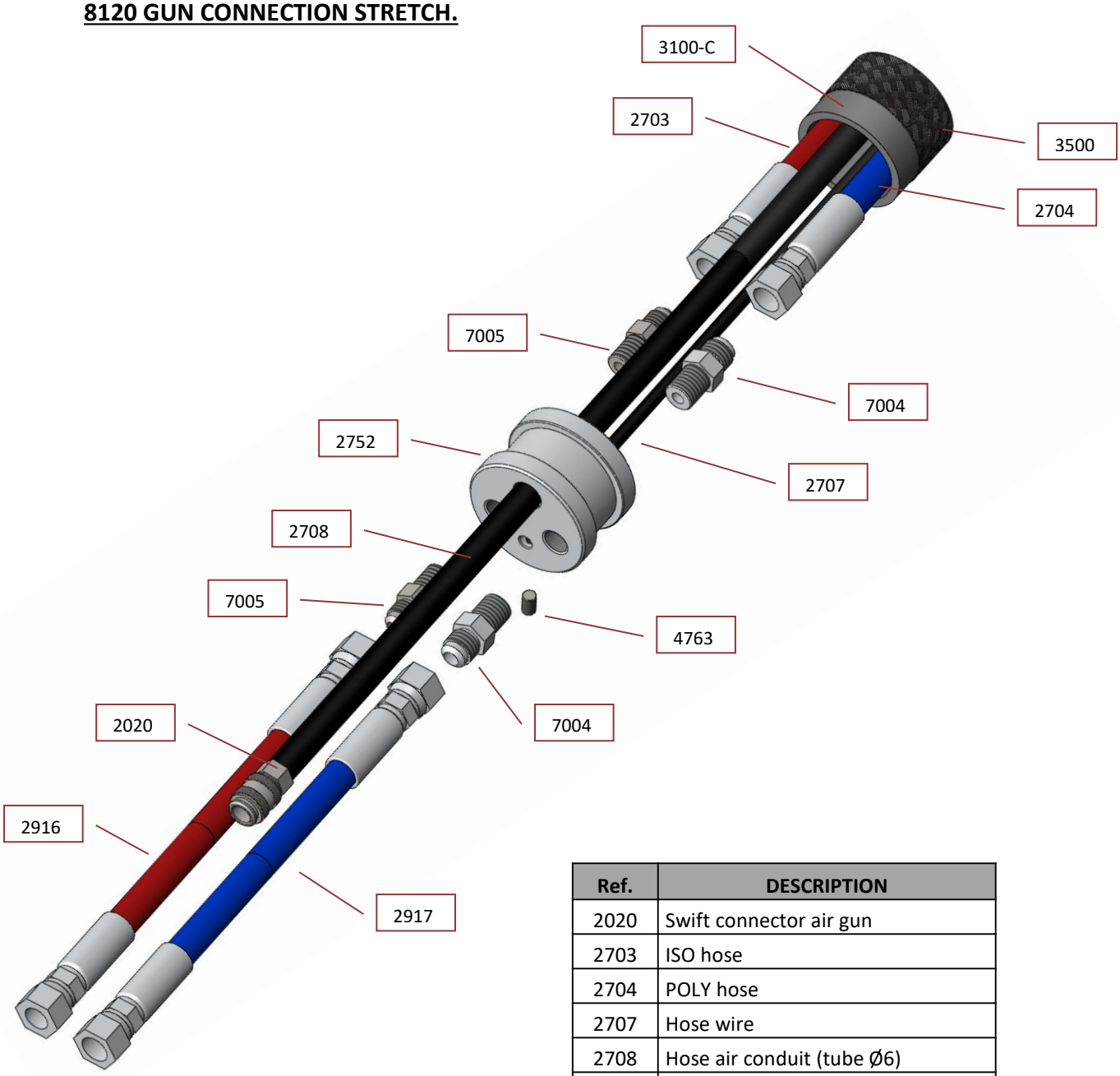

Ref.	DESCRIPTION
2020	Swift connector air gun
2703	ISO hose
2704	POLY hose
2707	Hose wire
2708	Hose air conduit (tube Ø6)
2752	End connecting block
2916	ISO gun line (hydraulic)
2917	POLY gun line (hydraulic)
3100-C	Armaflex thermal coating
3500	Bicolor anti-abrasion covering
4763	Inner Allen screw M6
7004	M 1/4''NPT - M1/2''SAE joint
7005	M 1/4''NPT – M9/16''SAE joint

hydraulic pump

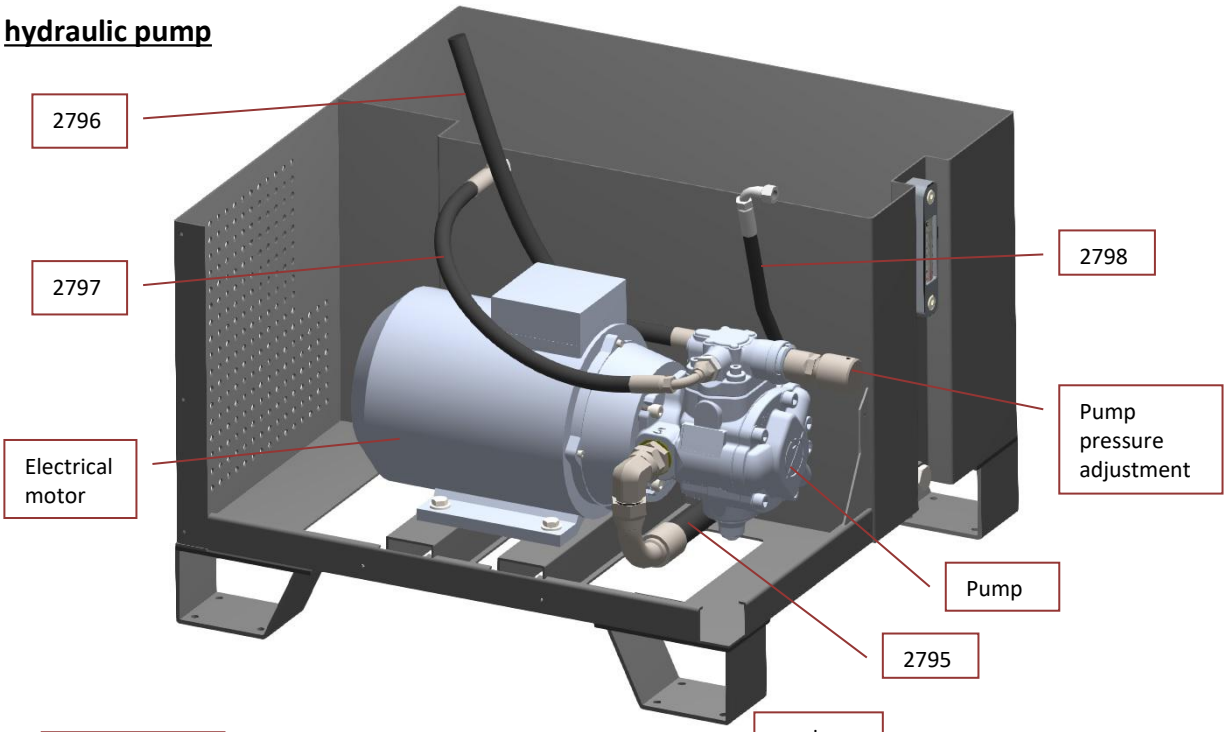

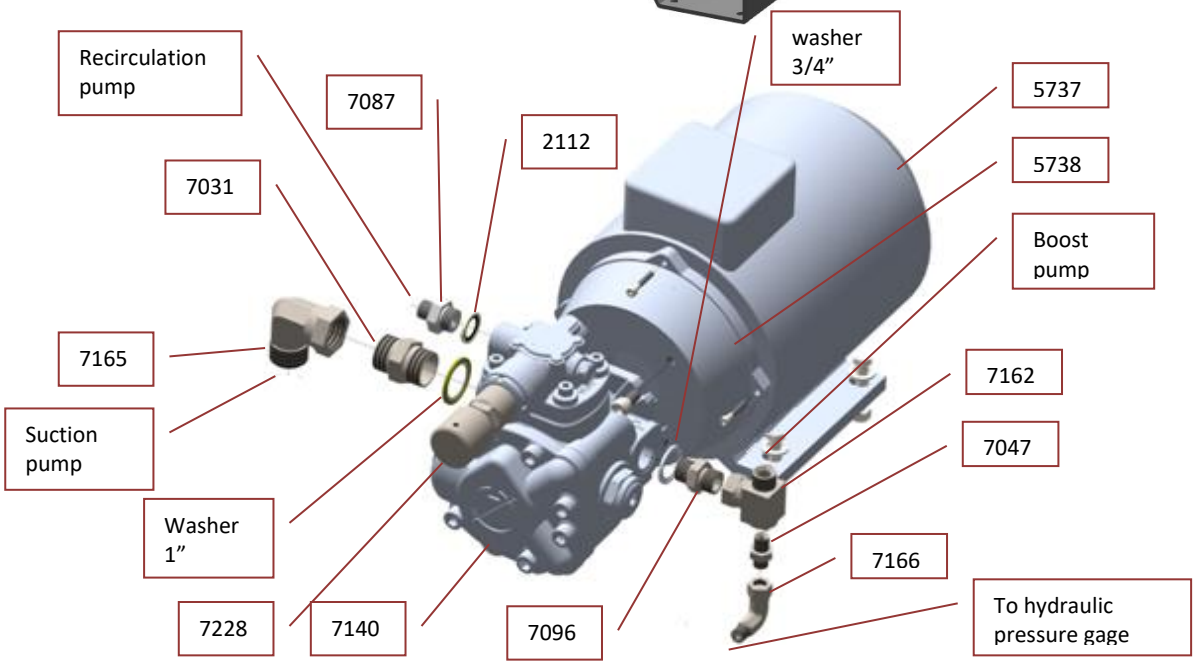

Ref.	Description	Ref.	Description	Ref.	Description
211	Watertight washer 3/8”	289	1/4” hidraulic pr. gage sleeve	716	TEE HTL1/2”G-M1/2”G-1/4”NPT
573	Electric motor	703	M-M 1” hidraulic joint	716	F1”-M1”Gas short elbow
573	Motor-pump adapter	704	M-M 1/4”NPT 1/4”BSP joint	716	F1/4”-M1/4”Gas short elbow
279	3/4” suction pump esleeve	708	M-M 1/2”–3/8” Gas reduction	722	Hydraulic pump regulation
279	1/2” bost pump sleeve	709	M-M 3/4”-1/2”G reduction		
279	3/8” Recirculation sleeve	714	Hydraulic pump		

13. ELECTRICAL CONTROLS PANEL.

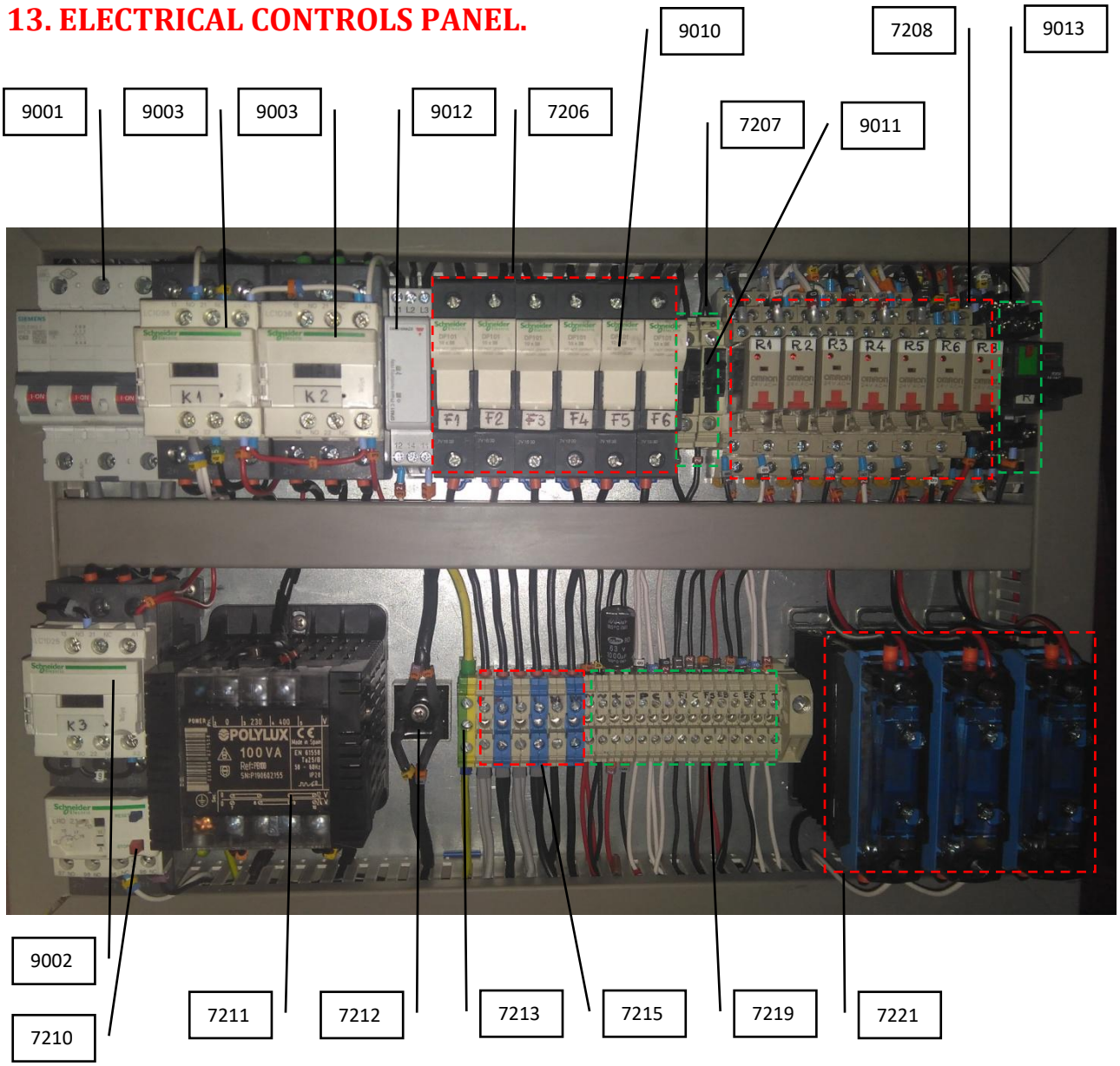

7206 Fuse holder
7207 Maneuver fuse holder
7208 Two-contact Relays
7210 Thermal Relay
7211 Maneuver transformer
7212 Rectifier
7213 Earth terminal
7215 Heater connection terminals
7219 Maneuvring connection terminals

7221 Solid state relays
9001. General magnetothermal 3x63A.
9002 Contactor 25A
9003 Contactor 38A
9010 Fuses 25A
9011 Glass fuses 2A
9012 3 Phase monitoring relay
9013 4-contact relays

14. HOSE TRANSFORMER.

6000 VA transformer connection example

7222..... Ammeter transformer.
7041..... Hose transformer.

15. ELECTRICAL DIAGRAMS.

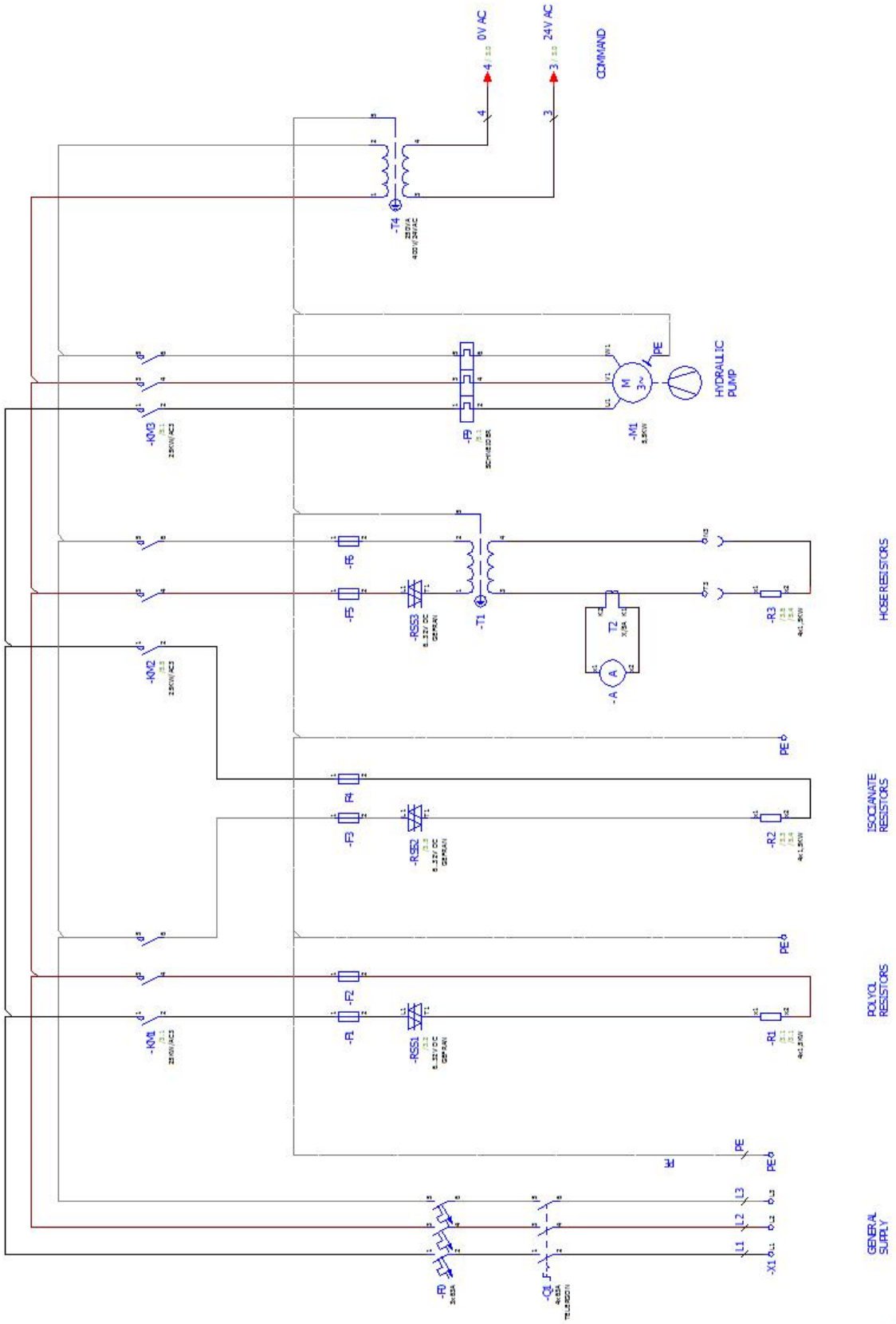

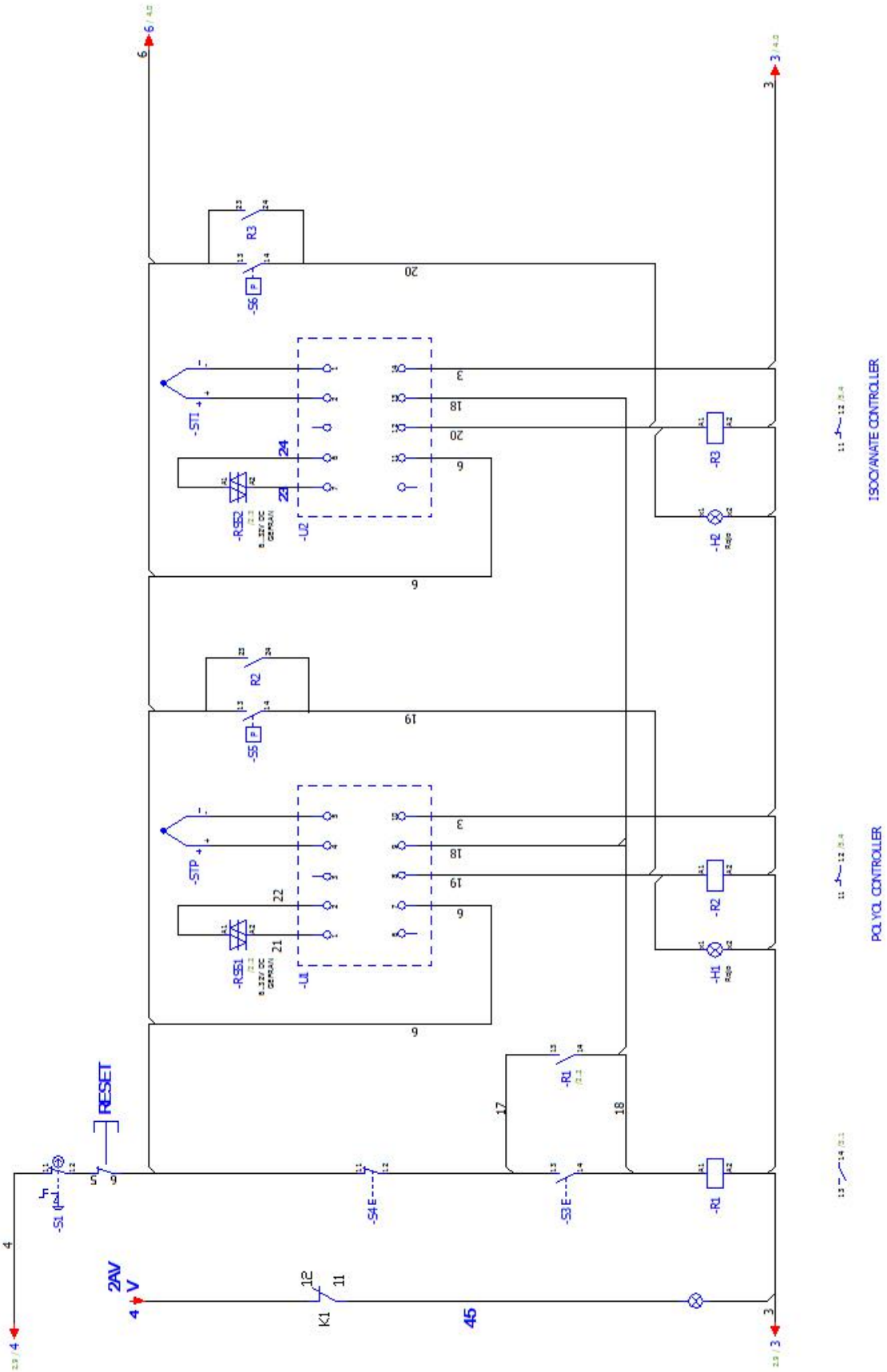
ISOCYANATE CONTROLLER
POLYOL CONTROLLER
RESET
24V
45

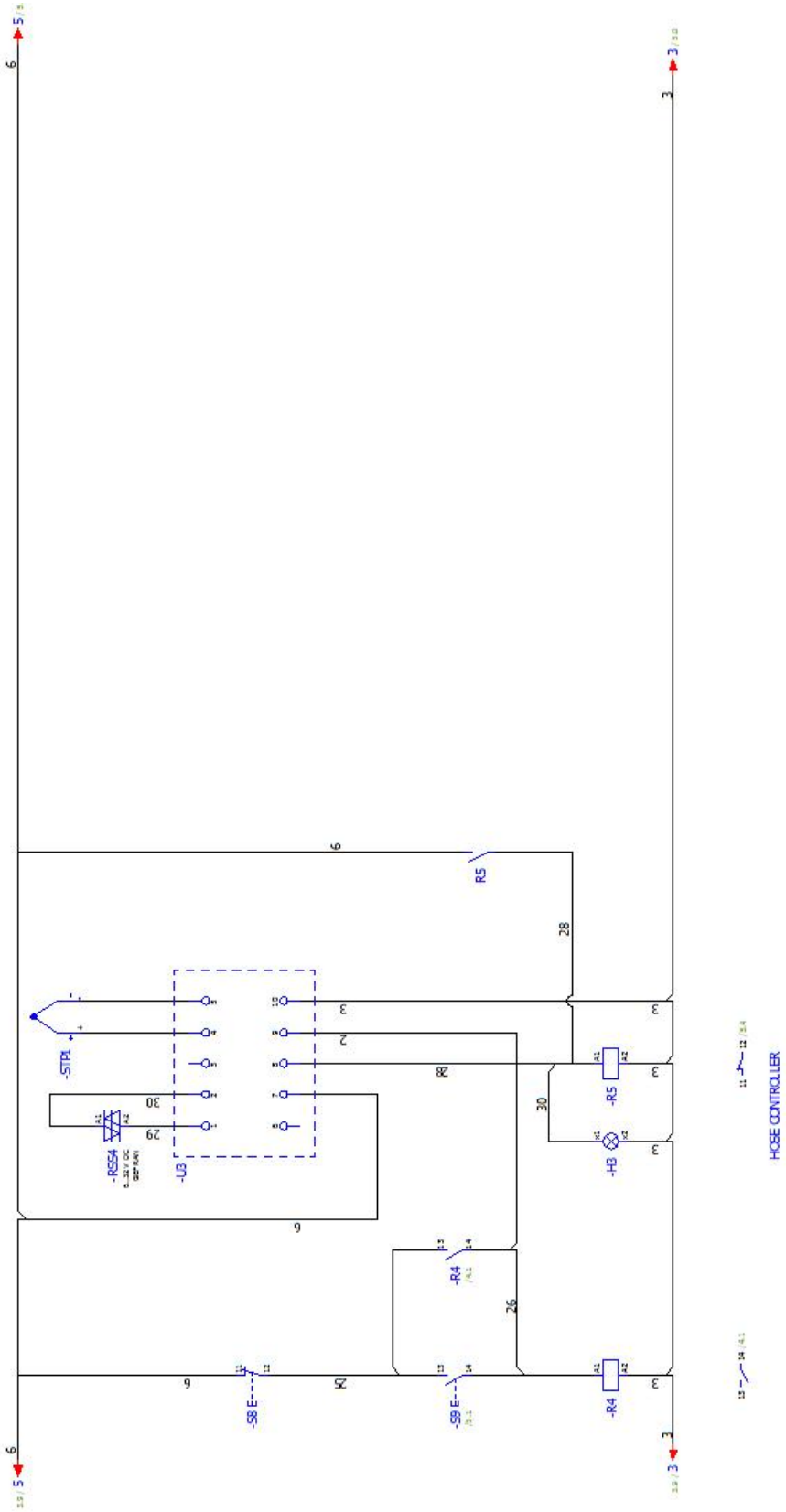
-STP1
-RS54
-U3
-SB E-
-SB E-
-R4
-R4
-R5
-R5
-H3
HOSE CONTROLLER

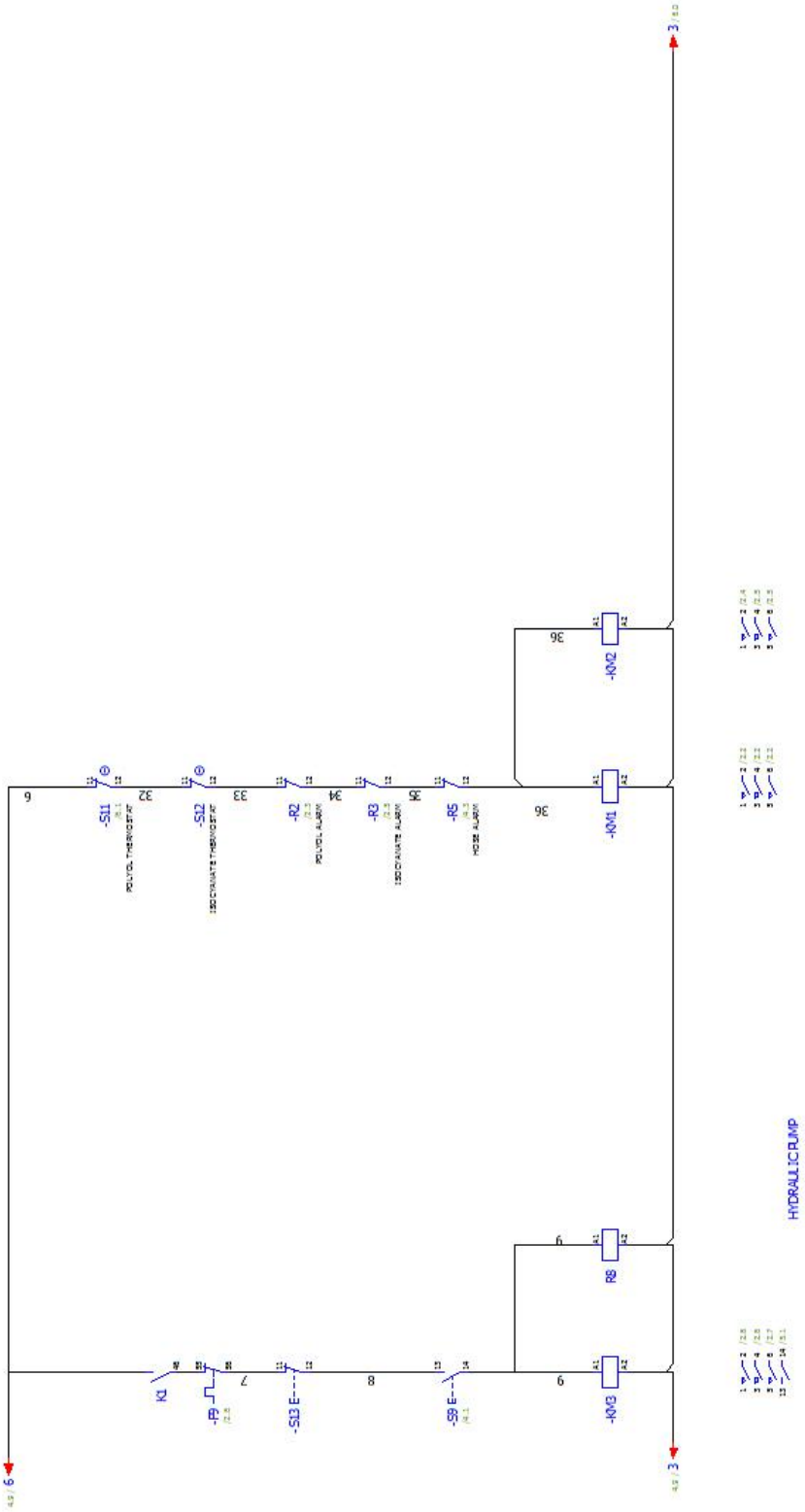
-S11
-S12
-R2
-R3
-R5
-KM2
-KM1
K1
-FP
-S13 E
-S9 E
R8
-KM3
HYDRAULIC PUMP

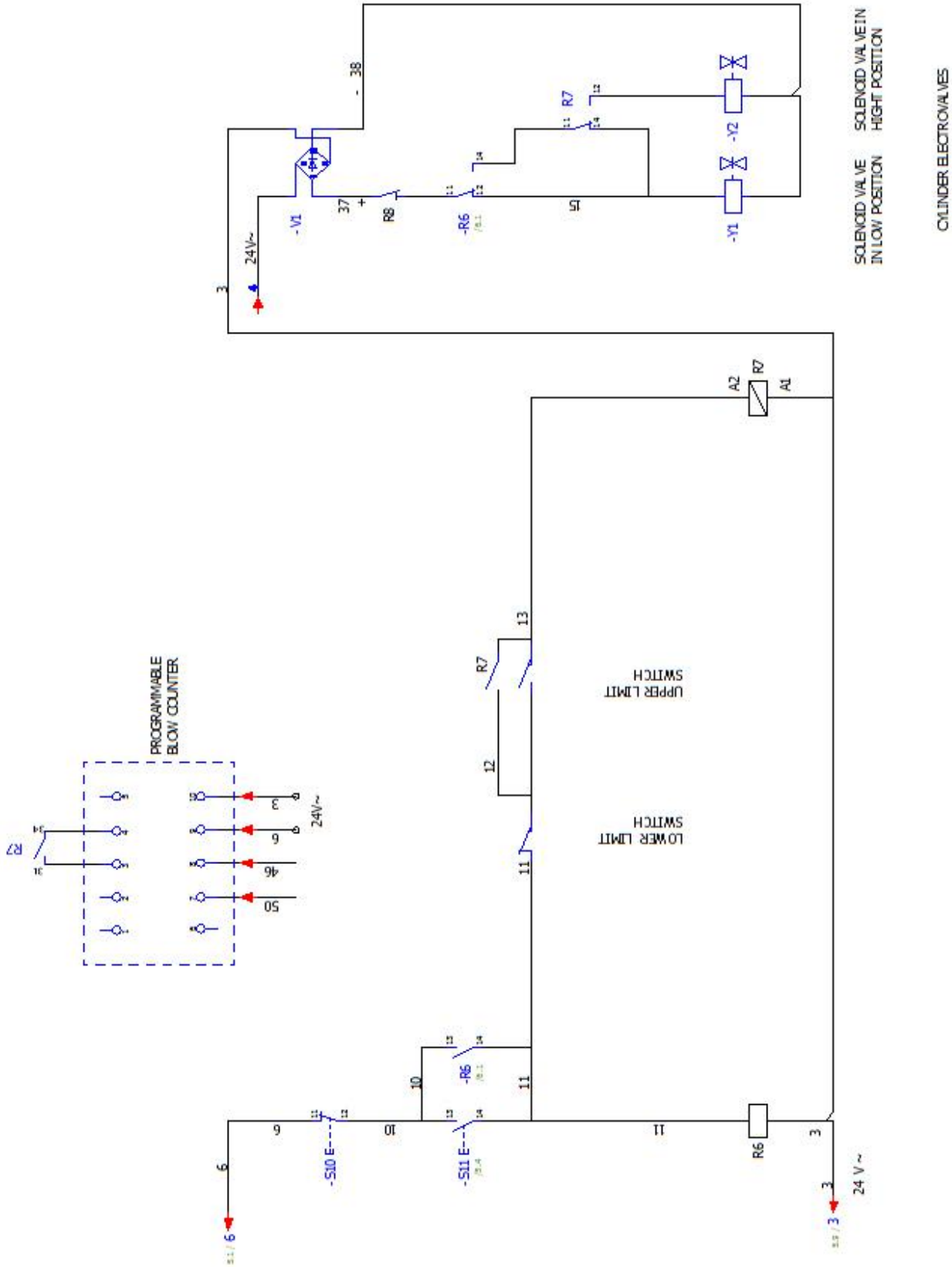
PROGRAMMABLE BLOW COUNTER
R7
24V~
3
6
46
50
UPPER LIMIT SWITCH
LOWER LIMIT SWITCH
R7
13
12
11
A2
R7
A1
-R6
10
11
-S10 E-
-S11 E-
R6
24 V ~
6
3
-V1
-V2
-Y1
-Y2
R8
-R6
R7
24V~
38
37
15
SOLENOID VALVE IN LOW POSITION
SOLENOID VALVE IN HIGHT POSITION
CYLINDER ELECTROVALVES

16. START-UP SEQUENCE.

1. Install the machine completely fixed and stable.
2. Electrical connection of the unit. Ensure that the electrical connection is correct and that the line is suitably shielded (magnetothermal and differential shielding).
3. Connect the machine to earth using the terminal fitted for the purpose (only necessary in the event of the external power supply hose has no earth conductor). Check the correct phase connection. If the phases are incorrectly connected, the 3 phase monitoring relay prevents the machine from starting.
4. Unroll the hoses.
5. Ensure that the emergency pushbutton is activated.
6. Connect product tanks to the machine by transfer pumps (they can be directly connected to the machine in the event of emergency). [1]
7. Connection of compressed air (external supply) to the distributor.
8. Open the main air valve located in the air distributor.
9. Adjust the pressure regulator to between 6 and 8 bars.
10. Unscrew the loose nut on each stopcock on the gun and insert the end of each hose into their respective tanks (this task of recirculating liquids must be carried out before using the machine for bleeding the air in the same). [2]
11. Put the general switch in the ON position.
12. Connect hydraulic pump by start button.
13. Select the working pressure by means of a pressure regulator located on the front of the machine. A pressure (bar) must be selected depending on the product to be used:
    i. Polyurea: 170-200 bar
    ii. Polyurethane: 100-120 bares

    (In the pressure switches of both heaters a protection pressure is preselected, causing the machine to stop if this pressure is reached due to any anomaly).
14. Connect the cylinder start button to fill the pumps with liquid.
15. Select the required temperature using the thermostat for each product and connect the same with the start-up pushbutton.[3-4]
16. Select the required temperature on the hose using the thermostat[5].
17. As explained in point 10, these functions are performed without the gun for bleeding air (leave the cylinder activated for a few minutes for effective bleeding).
18. Stop the machine to be able to perform the following procedures.
19. Reconnect both loose nuts on each product to the gun.
20. Open the air stopcock on the gun.
21. Open the air stopcock on both products on the gun.
22. The system is now ready to start the application[7].
23. Use the appropriate means of personal protection[8].

1. Do not start up the system without material in the pumps or tanks.

2. Do not unscrew the loose nut on the gun with the machine in

3. Do not connect the heaters without products.

4. The operational temperature will vary depending on climatic conditions or the reaction of the different brands of the products.

5. Where necessary to alter the length of the hose, it will be necessary to first alter the output voltage of the transformer (Consult the Technical Assistance service).

6. Do not open the taps on the products without first opening the air stopcock (on the gun).

7. Do not place any part of the body in the direction of the projection nor project towards other people.

8. It is advisable to use protective goggles, air mask, protective clothing and other safety equipment. Manufacturers' recommendations and the instructions for the products used should be followed.

17. SELECTING WORK TEMPERATURE.

Using the temperature controllers on each product and on the hose (EMKO ESM 4420), the ideal temperature can be selected depending on the products to be used and the projection work to be carried out. (The controllers are factory set with the factory temperature selected according to customer requirements).

In order to select the required temperature, follow these steps:

1. Press PSET on the controller appearing on the PSET function screen.
2. With the keys ⇦ ⇨ the temperature range is increased or decreased.
3. Once the ideal temperature has been set, press ASET to keep the selected value, resetting the controllers screen to its initial status.

18. SELECTING WORK CYCLE.

Celtipol machines can be fitted, if required by the customer, with a cycle counter with preselect and with the possibility of blocking when the machine reaches the end of the cycles indicated.

This cycle counter can perform two functions:

1. Only count cycles when the machine is not stopped.
2. Count cycles and blocking the machine when following the programmed cycles.

In order to select the required cycles, proceed as follows (on PIXYS counters):

a. When pressing the SET button, SETPOINT 1/2 is displayed.

b. Pressing or selecting the required SET.

c. When SET pressed, a blinking figure is displayed.

d. When pressed or , modifies the SETPOINT figure that appears blinking.

19. DAILY STOP SEQUENCE.

1. Close the stopcock taps on both products on the gun.
2. Activate the gun trigger two or three times to clean[9].
3. Deactivate heating in the hose with the stop pushbutton[10].
4. Deactivate heaters with the stop pushbutton.
5. Deactivate the cylinder with the stop pushbutton.
6. Open the stopcock taps on the products in the gut and pull the trigger several times until the pressure in the products decreases below 30 bars (see output pressure gages) and check that the pump Piston rods are at their lowest position and fully insert them inside the body of the pump in order to guarantee autolubrication.
7. Deactivate the pump with the stop pushbutton.
8. Disconnect the main switch.
9. Close the stopcock taps for products on the gun and pull the trigger 2 or 3 times.
10. Close the air stopcock on the gun.
11. Dismantle the side and front housings of the gun for cleaning. Lubricate with Celtipol grease[11].
12. Close the main compressed air valve on the machine.
13. Electrical disconnection of the machine.

9 Observe if there are any losses in the injectors by repeatedly activating the trigger .

10 The hoses with hot products should not be bled.under no circumstance.

11 Never dismantle the side blocks on the gun with the product taps open since the gun may fill up with foam and be a risk for the user.

20. EXTENDED STOP SEQUENCE (OVER ONE MONTH).

1. Ensure that the stopcock taps on the products on the gun are fully closed.
2. Connect the transfer pumps to two separate containers, with an approximate amount of 10 litres of solvent in each.
3. Spray material on the side blocks, opening the stopcock taps in the products on the gun. The jet should be aimed at an appropriate container until clean solvent comes out of the side blocks.
4. Connect the transfer pumps to two separate containers, with an approximate amount of 10 litres of D.O.P. plasticizer.
5. Re-add the spray until all the solvent has been bled from the system and only the plasticizer comes out of the side blocks[12].
6. Apply a thick layer of Celtipol grease to each side of the front housing of the gun.
7. Once again, place the side blocks on the front housing of the gun[13].
8. Remove the adapters from the transfer pumps from the product tanks. Clean the plug adapters with solvent and then cover with Celtipol grease.
9. Clean the large needles in the plug on the material tanks with solvent, cover with Celtipol grease; reinstall the plugs/caps on the drums when received from the material supplier.

12 Do not bleed the D.O.P. plasticizing fluid from the accumulated system.

13 Grease should appear on the tip of the mixing chamber. Excess grease should be spread over the rest of the gun to help to eliminate any excess accumulated spray.

21. SYSTEM MAINTENANCE.

- ✓ Check the condition of the existing DOP plasticizer oil in the lubrification bottle of the Isocyanate pump. Empty every two weeks, clean with ethyl glycol and fill the lubrication bottle with DOP. (The oil should be changed immediately if color changes or signs of solidification are observed.)
- ✓ Clean filters on the product input with ethyl-glycol (weekly).
- ✓ Regularly check the emergency button trigger.
- ✓ Regularly check the safety elements for over-temperature and over-pressure.
- ✓ Regularly check the status of the machine's internal lines, both for air and products.
- ✓ Regularly check the status of the hoses (for abrasions or cuts).
- ✓ Clean and refill the gun with white lithium grease or petroleum jelly (daily).

22. GENERAL BREAKDOWNS.

Another way of avoiding incorrect handling of the equipment and to avoid any possible situation of risk is to know how to detect the source of the more frequent breakdowns, as well as to know how to solve them. To achieve this, essentially, the operator/user should be acquainted with:

1. The normal working order of the equipment, with its corresponding sequences of start-up and stop.
2. The flow diagram of the materials going through the equipment.
3. The appearance of the product perfectly applied and its possible variables.

Since the ultimate aim of the equipment is the correct application and finish of the foam, it should be the final appearance of this that we should, in the first place, examine to locate any possible breakdown or anomalies in the application process and, in this way, identify the material that is missing (isocyanate or Poliol).

Therefore, the most appropriate procedure to locate breakdowns is as follows:

1. Identify the product missing.
2. Check the pressure gage corresponding to the material that is missing in such a manner that if the reading is higher than normal, there is an obstruction problem between the pressure gage and the point in the chamber where the gun makes the mix. Conversely, if the reading is lower than normal, there is an obstruction problem between the pressure gage and the transfer pumps[14].
3. In the event that the hydraulic pressure in the material that is deficient is higher than normal, we should start to check for possible causes for the obstruction from the furthest point away from the unit (gun) and move upstream following this sequence:

   I. **Gun:** [14]
   - ✓ Ensure that the product tap is fully open.
   - ✓ Check the cleanliness of the front hole on the mixing chamber.
   - ✓ Check for the extent of cleanliness in the filter grille.
   - ✓ Check the cleanliness of the side hole on the mixing chamber.

   II. **Hose:**
   - ✓ Ensure that the hoses are not blocked.

4. In the event that the hydraulic pressure in the material that is deficient is lower than normal, we should start to check for possible causes for the obstruction in the furthest

point away from the machine (product feed) and move downstream, starting with the products tanks:

- ✓ Check for product in the tanks.
- ✓ Check the temperature of the material, since an excessively cold material, especially in the bottom of the tank, will increase the viscosity of the material and will block the transfer pumps. Conversely, excessive temperature in the material, on the polio side, will cause irregular properties in the material.
- ✓ Check the status of the dosing pumps, paying special attention to determine if the flash appears in the ascending or descending run. If the flash appears on the descending run, check the seating of the lower ball. If the flash appears on the ascending run, check the seating of the upper ball.

In any case, repair works should be carried out as soon as possible. The unit should be open and in contact with the air as brief a time as possible in order to avoid other problems such as incoming humidity in the system or crystallization of the isocyanate.

In the event of the unit being exposed to the atmosphere, it will be vital to make it work for enough time to shift the material that there was in the unit when opened[15].

14 We should only concern ourselves with the hydraulic pressure on the side where the material is lacking. Furthermore, we should bear in mind that the pressures recorded on both pressure gages do not necessarily have to coincide due to the different products used, different viscosities, etc.

15 Prior to any kind of handling or repair of the gun, discharge all the pressures in the fluid and air.

23. LOCATING INCIDENTS.

The CHV-320 machine has been designed and built to withstand severe work conditions with a high degree of reliability, on the condition that it is used and maintained in the appropriate manner. See below for information on possible incidents that may cause problems preventing continuing to operate with the Machine. The information provided should be use as a guide to be able to detect and solve most of the problems before resorting to the Celtipol technical assistance service. In any case, feel free to contact the technical assistance service where a team of qualified technicians will attend to you and will assess you wherever you may require.

Repairs conducted by non-qualified personnel or the use of spare parts that are not the originals may be hazardous for the operator.

Possible incidents:

1. Failure of the electrical supply:
   To switch on the machine, the main switch must be set to the ON position , lighting up the green LED light located above the switch. If this LED does not light up, this indicates that the electrical power does not exist or is faulty.

2. Emergency stop is activated:
   With the emergency stop button activated (the electrical power in the control panel is interrupted, causing a stop during the operation of the machine or making it impossible to start operation.
   Activation is visualized by the red LED located above.

   To unblock the emergency stop, pull the emergency button in the opposite direction to the control panel.

3. Short-circuit electrical overload.
   The control panel has a magnetothermal switch which, in the event of an electrical overload or a short circuit, causes the electrical current to cut off, and must be activated manually once the fault has ceased.

4. Unbalanced pressures:
   Decompensation of pressures occurs when an obstruction in the hose or in the gun prevents one of the components to be freely released through the gun chamber when projected or when a problem in the pumping system prevents one of the components from being able to reach the gun in the required amount.

   To determine whether decompensation occurs as a result of an obstruction or as a result of a problem in the pumping system, project with the gun, observe the pressure indicated on the pressure on the pressure gage in the other component: if the pressure of the missing component is higher, decompensation is the result of an obstruction. If the pressure is lower, decompensation is the result of a problem in the pumping system.

5. Cavitation
   Cavitation occurs when the pumping system requires a greater volume of material than that supplied by the feeding system, leading to the formation of a vacuum in the dosing pump. The causes that can cause cavitation are as follows:

a. The transfer pump fails to supply the required volume. The problem may be that the pump does not meet the required characteristics, the lack of air supply to the pump or that the pump is faulty. A 2:1 ratio pump is recommended for isocyanate transfer and a supply hose with a minimum internal diameter of 20mm.
b. High viscosity. Polyurethane foaming systems normally require a minimum transfer temperature of 12ºC. With lower temperatures, the product increases its viscosity making pumping difficult. When environmental conditions do not allow the products to be kept at a minimum temperature of 12ºC, auxiliary heating elements must be used to adapt the products to the minimum temperature required for transfer.
c. The product inlet filter is obstructed.
d. There has been wear and tear on the gaskets or pump seals preventing the supply of the required product.

6. Failure in the ends of stroke in change of direction.

   The dosing pump system has two limiting ends of run to change the direction of the pumping unit.

   If one of them fails, the pump unit will lock in position near where the end of stroke has failed.

   Check:

   a. That there are no foreign bodies preventing the contact of the plate with the end of stroke.
   b. Manually activate the directional valve to rule out any failure in the same.
   c. Electrical current in the ends of run.

7. Safety pressure switches:

   The hydraulic circuit of each product has a factory set safety pressure switch at a pressure limit depending on the size of the pumps installed in the machine. When the limit pressure is reached, the machine stops running and the red light above the temperature controllers lights up (this light comes on when there is an overpressure - it is displayed on the pressure gage - or an over-temperature - an alarm goes off on the temperature controller).

   Until the pressure falls below the set limit, the machine cannot be restarted by resetting the push-buttons at the start of each function.

8. Temperature controllers
   Product and hose temperature control is established. The machine has a temperature probe installed in each of the heaters and a probe in the hose that, through their respective controllers on the control panel, can adjust the temperature according to customer requirements.

   In the temperature controllers, the safety temperature is adjusted which, if at any time this temperature is exceeded, the Machine stops operating and an alarm is set up in the temperature controller at the same time that the red pilot light located in the upper part of the controller where the alarm is created lights up.

   Until the temperature drops below the set limit, the machine cannot be restarted by means of the red (Reset) button located above the emergency stop and then the reset of the start buttons of each function.

24. FAULT DETECTION IN THE APPLICATION

The simplest way to objectively detect if there are faults in the application is to observe the spraying, which is affected by the following parameters:

1. Temperature: A material that is too hot will produce separation in the fan. A material that is too cold will produce a ripple effect.
2. Pressure: Too high a pressure will result in excessive or disaggregated spraying. A pressure that is too low will produce a ripple effect.
3. Contamination of the products in the mixing chamber.
4. A foreign object in the mixing chamber will cause bad fanning.

25. LIST OF COMPONENTS.

26. COMMERCIAL GUARANTEE.

Dear customer,

We thank you for your deference in purchasing this CELTIPOL product and hope you are satisfied with your purchase. In the event that this CELTIPOL product requires any service during the guarantee period, our technical service will assist you at the following address:

Faustino Santalices, Nº 35 - Bande - (Ourense) Spain
Tel: 988 443 105 - Fax: 988 444 410
E-mail: info@celtipol.com

YOUR GUARANTEE:

Through this consumer guarantee, CELTIPOL warrants the product against faults in material and workmanship for a period of 2 years from the original date of purchase.

If during this guarantee period the product has faults in materials or workmanship, CELTIPOL will repair or replace (at CELTIPOL's discretion) the product or its faulty parts, under the conditions specified below and without any charge for workmanship or parts. CELTIPOL reserves the right (at its sole discretion) to replace components of faulty products or to replace low-cost products with new or recycled products, in accordance with the laws of each country.

Conditions:

1. This guarantee is valid only when presented with the original invoice or sales receipt (indicating the date of sale and model purchased) along with the faulty product. CELTIPOL reserves the right not to offer the free guarantee service if these documents are not presented or if the information they contain is incomplete or illegible.

2. This guarantee does not cover or pay for damages resulting from changes or adjustments that may be made to the product, without the prior written consent of CELTIPOL in order to comply with safety or technical standards, national or local, in countries other than those for which the product has been designed and manufactured.

3. This guarantee shall not apply if the serial number of the product has been altered, deleted, has disappeared or is illegible.

4. This guarantee does not cover any of the following:

a. **Regular maintenance and repair or replacement of parts resulting from normal wear and tear.**

b. Damage resulting from misuse, Including:

- **Failure to use the product for purposes other than those for which it is designed or failure to comply with CELTIPOL's instructions for use and maintenance.**
- **Installation or use of the product in a manner that does not comply with the technical or safety regulations of the country where used.**
- **Repairs carried out by a non-authorized technical service or by the consumer.**
- **Accidents, lightning, water, fire, inadequate ventilation or any cause beyond the control of CELTIPOL.**
- **Electronic components (inside the control panel) affected by bad connections or sudden voltage changes (electrical fluid deficiencies).**
- **Faults of the system to which this product is incorporated.**
- **This guarantee has no influence whatsoever on the legal rights of the consumer granted by the applicable national legislation, nor on the rights of the consumer vis-à-vis the distributor deriving from the purchase/sale contract established between the two.**

CELTIPOL

Faustino Santalices, 35
32840 Bande
Ourense (España)
E-mail: info@celtipol.com
Telf.: (34) 988 443 105
Fax: (34) 988 444 410

www.celtipol.es

Fabricado en España
Made in Spain