TECHNICAL MANUAL 2023

CHL-400

HYDRAULIC SYSTEM FOR SPRAYING POLYURETHANE, POLYUREAS AND BI-COMPONENTS WITH TOUCH SCREEN

CELTIPOL

TABLE OF CONTENTS:

1. GENERAL CONDITIONS..... 4

2. SAFETY CONDITIONS.....5

3. APPLICATION SAFETY.....6

4. SAFE HANDLING OF CHEMICAL PRODUCTS.....7

5. EQUIPMENT TECHNICAL SHEET.....8

6. OVERVIEW..... 9

7. PUMPING GROUP EXPLODED VIEW. 8200..... 16

8. LIQUID FILTER EXPLODED VIEW 2100..... 24

9. AIR DISTRIBUTOR SET 2332..... 25

10. LIQUID HEATER EXPLODED VIEW..... 26

11. HIDRAULIC PUMP AND SLEEVES.....27

12. HOSE..... 29

13. ELECTRICAL CONTROL PANEL.....32

14. ELECTRICAL DIAGRAMS..... 34

15. MANAGING THE TOUCH SCREEN..... 40

16. MACHINE CONTROLS.....55

17. START-UP SEQUENCE..... 57

18. SELECTING WORK TEMPERATURE.....58

19. SELECTION OF WORK CYCLES..... 58

20. DAILY STOP SEQUENCE.....59

21. EXTENDED STOP SEQUENCE (OVER ONE MONTH)..... 60

22. SYSTEM MAINTENANCE..... 60

23. GENERAL BREAKDOWNS..... 60

24. LOCATING INCIDENTS.....63

25. FAULT DETECTION IN THE APPLICATION:.....66

26. LIST OF COMPONENTS.....67

27. TRANSFER PUMPS C-M 16.....69

28. RECIRCULATION KITS..... 75

29. COMMERCIAL GUARANTEE..... 77

30. CE DECLARATION..... 79

1. GENERAL CONDITIONS.

Before installing and starting up the Machine, read all the technical and safety documentation included in this manual carefully. It is important to pay particular attention to the information included here in order to become acquainted with handing and operating conditions of the Unit. All information is focused on bolstering User Safety and avoiding any possible breakdown arising from the incorrect use of the Unit.

Careful reading of this Technical Manual will give you a better knowledge of the system and procedures. Following the instructions and recommendations included here will reduce the potential risk of accident during installation, use or maintenance of the Machine, and will make it possible to have an incident-free operation for a longer period of time, better performance and the possibility to detect and solve problems in a swift and simple manner.

Keep this Technical Manual. You will be able to make consultations in the future, with access to useful information at all times. In the event of misplacing the manual, please request a copy from Celtipol.

The design of the Machine does not allow for it to be used in potentially explosive environments. Nor should the pressure and temperature limits stipulated in the technical specifications in this manual be surpassed.

2. SAFETY CONDITIONS

The first consideration to take into account is that during the design and project stage of the CHL-400 machine, the regulations in force regarding machine Safety and Prevention of Risk in the Work Place have been scrupulously respected. Therefore, we can firmly state that the machine is intrinsically safe.

Nevertheless, in common with any machine or tool, incorrect use of the same may cause more or less hazardous situations. These recommendations have been drafted to avoid such situations to ensure safe use and handling of the system.

Leading on from the above, clearly, all personnel that have anything to do with the spraying and handling operations of the machine must have an in-depth knowledge of these recommendations as well as all other recommendations that may be provided by the manufacturers of chemical products.

Throughout these operations, the intention is to provide a non-exhaustive list of the possible risks that may arise from spraying operations. For this reason, and depending on each particular application, it must be the user of the system who should carefully study the risks arising from the same, in line with the Regulation in force on the Prevention of Risks in the Work Place.

Another aspect for consideration is the prevention of possible risks arising from the use of different chemical products, some of which may be hazardous if used incorrectly. Special attention should be paid to any fumes issued during use of polyurethane foam and polyurea systems since isocyanate compounds are used in spraying operations.

In short, to ensure that the handling and use of the spraying equipment is as safe as possible, the user must strictly follow the following aspects indicated in this manual.

3. APPLICATION SAFETY.

It is advisable for personnel with a history of respiratory complaints to avoid exposure to all isocyanates.

• Chemical products must be handled safely in accordance with manufacturer's recommendations. The manufacturer should provide information on the toxicity of the products used as well as actions to take in the event of accident (wounds, irritation, etc.).

• It should be taken into account that solvents that may be used in cleaning operations may also entail additional risk during handling.

• Do not apply until adequate ventilation is ensured, either naturally or forced, if required. Suppliers of chemical products must be applied to in order to determine the values at which the concentrations of fumes may be hazardous.

• The appropriate procedures and systems must be applied to detect hazardous concentrations of fumes.

• In the event of not being able to ensure appropriate ventilation, both the personnel applying substances and those working in the area influenced by fumes must, without fail, use certified breathing apparatus.

At all times, users must use the appropriate personal protection equipment (gloves, breathing masks, goggles, protective clothing, etc.).

• Users must be completely familiar with the chemical products and with the use of the equipment.

- In order to prevent any possible bodily harm caused by incorrect handling of raw materials and solvents used in the process, please read carefully the safety information provided by the supplier.
- Treat waste according to the regulations in force.
- Electrical maintenance of the machine must only be conducted by a qualified electrician.
- In order to avoid damage caused by the impact of pressurized fluids, do not open any connection or carry out any maintenance work on components under pressure until the pressure has been completely eliminated.
- Use appropriate protection for operating, maintenance work or whenever present in the working area of the Machine. This includes but is not limited to the use of a face mask, goggles, gloves, footwear and safety clothing.
- Certain components of the Machine reach temperatures that can cause burns. Do not handle or touch the hot parts in the Machine until they have cooled down.
- In order to prevent any serious harm due to crushing or amputations, do not work with the Machine without safety protection from duly installed moving parts. Make sure that all safety protection is correctly fitted when completing repairs or maintenance work.

4. SAFE HANDLING OF CHEMICAL PRODUCTS.

Products such as polyisocianates, organic solvents and diamines should be stored in a place exclusively for and adapted to such a purpose, with restricted access. Maximum temperatures must be strictly adhered to, both in the application and in storage of chemical products, at all times following the manufacturer's recommendations.

• Also, chemical products are to be stored at all times in suitable containers, following the manufacturer's recommendations.

• Containers must not be opened until immediately before being used in order to avoid contamination by damp. Any leftover product after being applied should be put back into the original container and be stored in a dry, ventilated place.

• During cleaning tasks of spilt components, it will be essential to use eye protection, gloves and wearing breathing apparatus. Spilt isocyanate can be collected with any absorbent inert product, such as sawdust. In any case, it is important to avoid skin contact. The absorbent product is to be immediately collected and dumped into an open container through the upper part.

• Throughout the entire operation explained above, the area must be correctly ventilated.

Safety personnel equipment:

Celtipol recommends the following personnel safety equipment for operations with foaming (see table):

- **Protective mask for airways.**
- **Goggles to protect the eyes.**
- **Headset to protect against noise.**
- **Gloves to protect hands.**
- **Protective clothing for the body.**

5. EQUIPMENT TECHNICAL SHEET.

HYDRAULIC EQUIPMENT CHL-400	
1.: TECHNICAL CHARACTERISTICS	
PREHEATER POWER	21.600 W
POWER TRANSFORMER	6.000 W
ELECTRIC ENGINE POWER	7.5 Kw (10 HP)
INSTALLED POWER	35.100 W
WORK PRESSURE	200 bar
ADMISSIBLE HOSE LENGTH	90 Ml
MAXIMUM PRODUCTION	18 l/min 20 kg/min
WEIGHT OF THE MACHINE	With no oil 260 Kg – with oil 330 Kg
DIMENSIONS	970x840x1255 mm
2.SISTEMS:	
➢ SLAVE LUBRICATION PUMP DURING MACHINE WORK.	
➢ AIR DISTRIBUTOR WITH THREE OUTLETS	
➢ AIR PRESSURE REGULATOR IN PUMPS AND GUN.	
➢ DIGITAL AUTOMATIC CONTROLLER FOR TEMPERATURES IN PREHEATERS AND HOSES.	
➢ AUTOMATIC BLOCKING SYSTEMS ACTIVATED BY EXCESS PRESSURE OR TEMPERATURE.	
➢ CONSUMPTION AMMETER FOR THE HOSE.	
➢ CYCLE COUNTER WITH PROGRAMMED BLOCKING PRESELECT.	
➢ PROTECTION FILTERS FOR INCOMING PRODUCTS.	

6. OVERVIEW.

FRONT VIEW

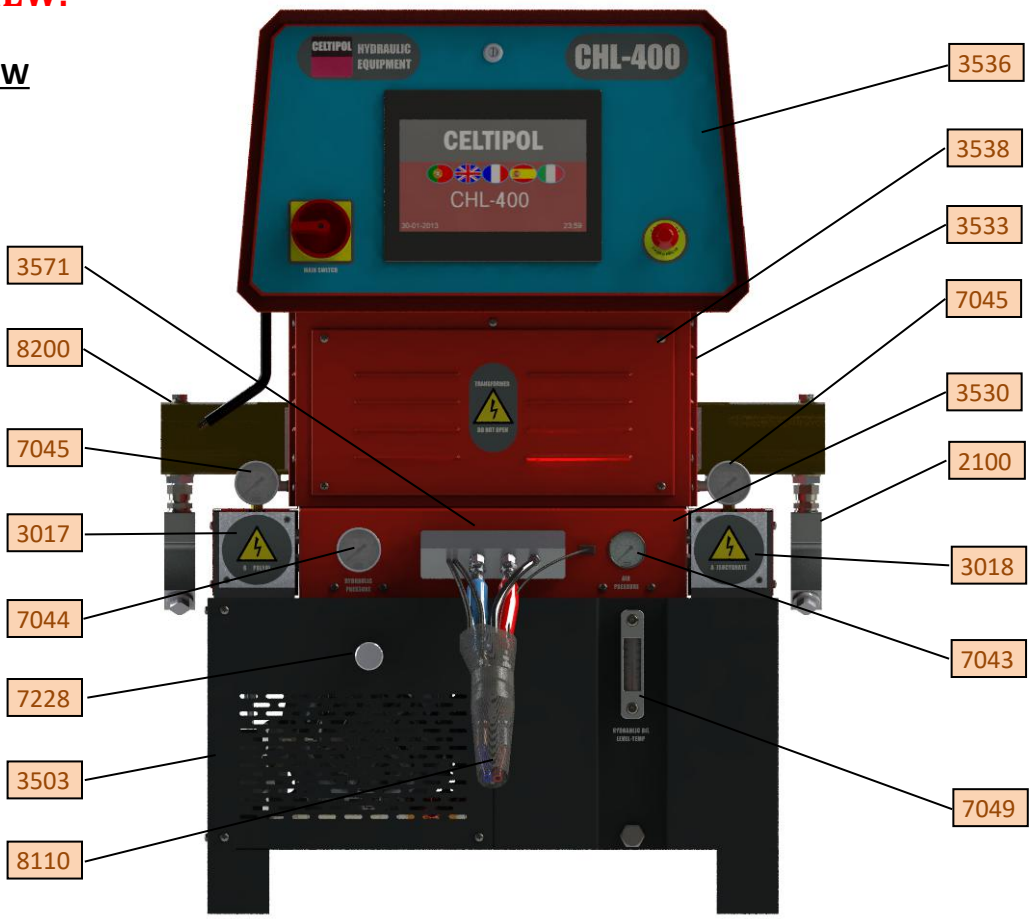

REF.	DESCRIPTION
2100	Liquid filters unit
3017	Polyol Heater cover
3018	Isocyanate Heater cover
3503	Motor ventilation grill
3530	Front housing
3533	Transformer housing
3536	Cover of the control cabinet
3538	Transformer cover
3571	Hose outlet unit
7043	Air pressure gage Ø52
7044	Hydraulic high pressure gage Ø62
7045	Products High pressure gage Ø62
7049	Thermometer and hydraulic level
7228	Pump regulation
8200	Pumping unit
8110	Machine connection stretch

CONTROL

REF.	DESCRIPTION
7055	Main switch
7056	Emergency stop
7059	Electric cabinet lock
5305	Control screen 10”

POSTERIOR

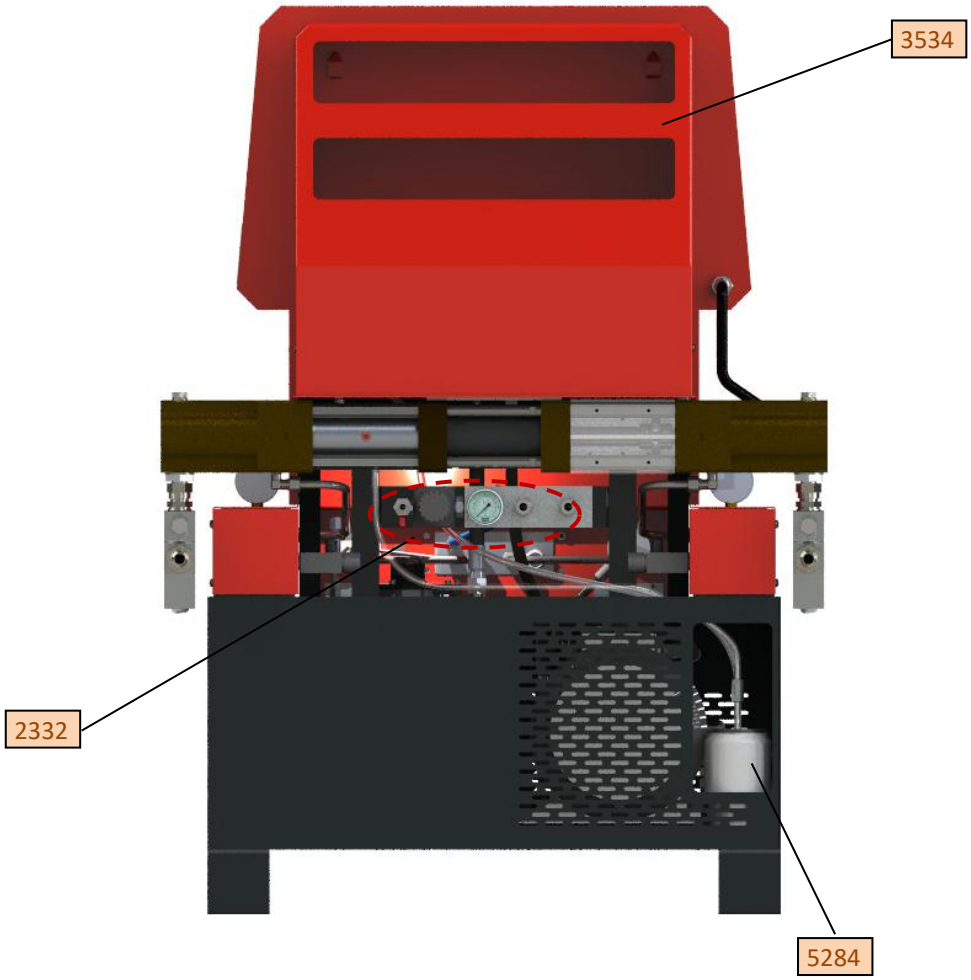

REF.	DESCRIPTION
2332	Air distributor set
3534	Back cover
5284	Lubrication Liquid Bottle

LATERAL IZQUIERDA:

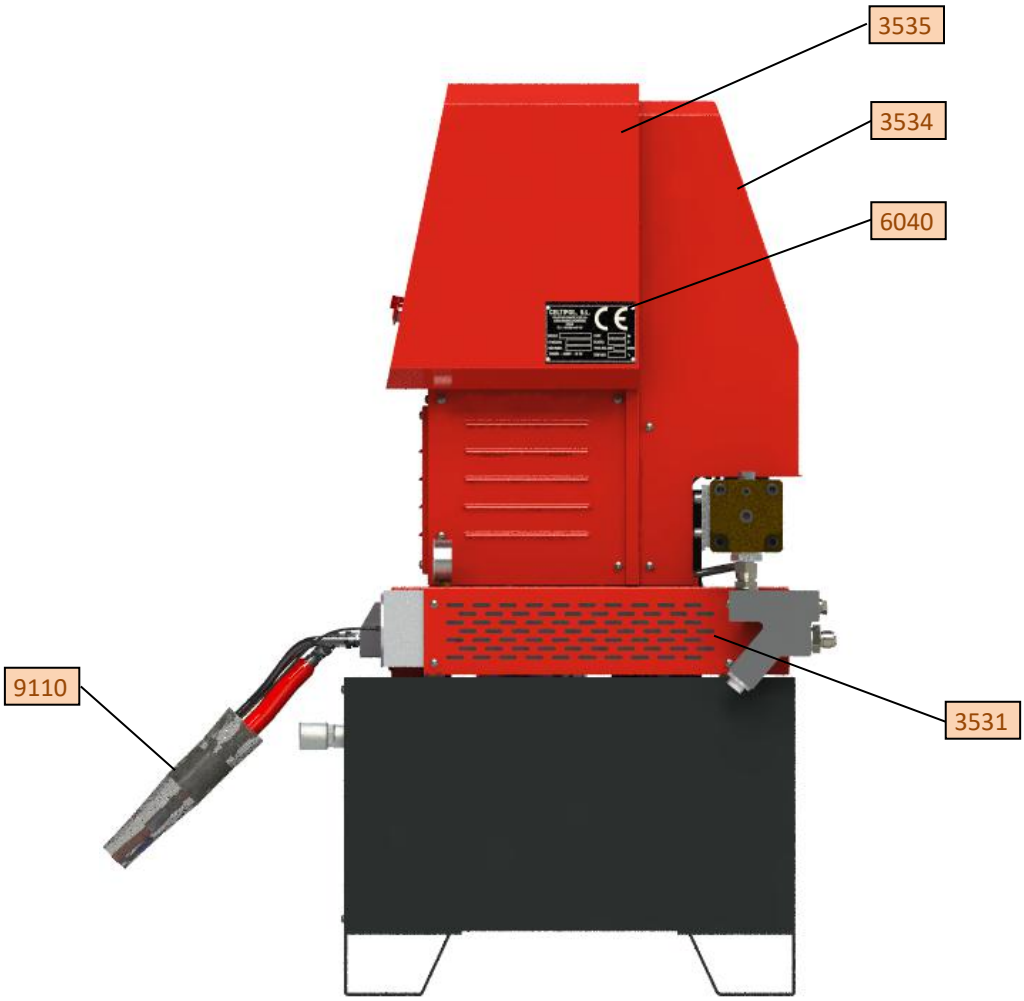

REF.	DESCRIPTION
3531	Isocyanate heater protection
3534	Back cover
3535	Control cabinet
6040	Identification plate
9110	Black heat shrink tubing

RIGHT SIDE: without back cover or grill

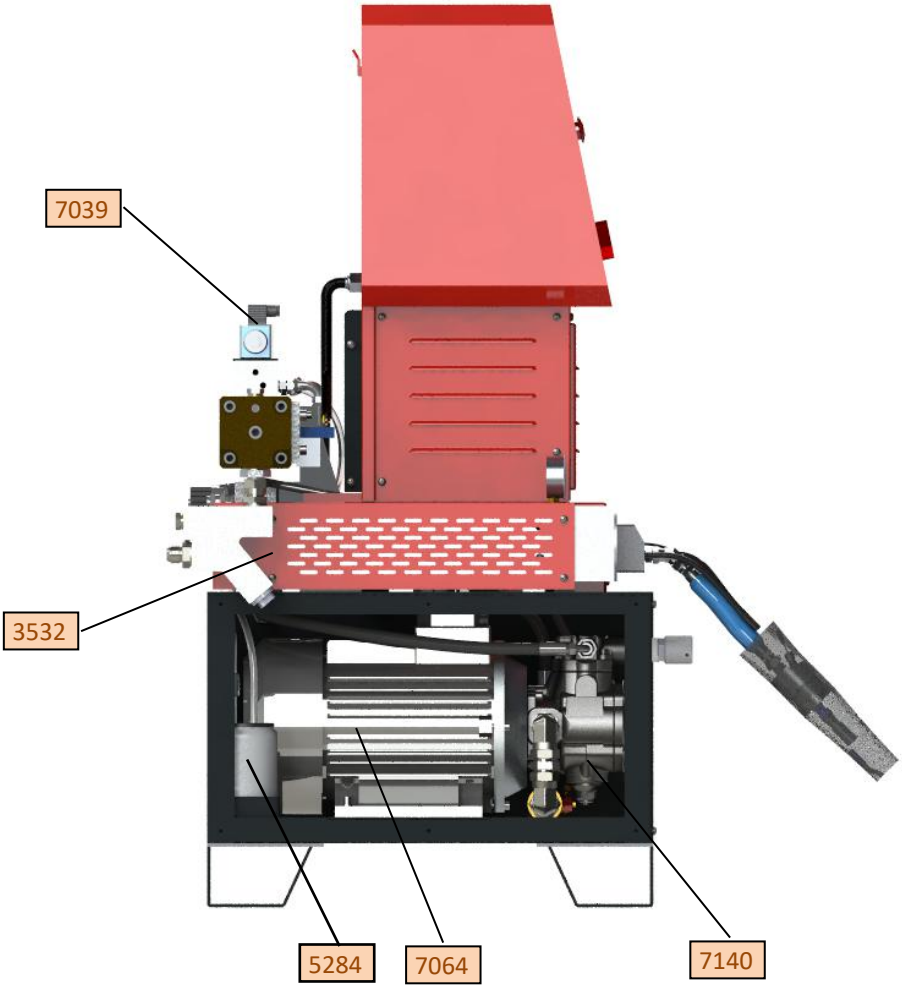

REF.	DESCRIPCIÓN
3532	Polyol heater protection
5284	Lubrication Liquid Bottle
7039	Solenoid valve
7064	Electrical Motor 132M 7,5 Kw
7140	Pump PHP 1 20-25-32 FHRM

DETAIL: no housings

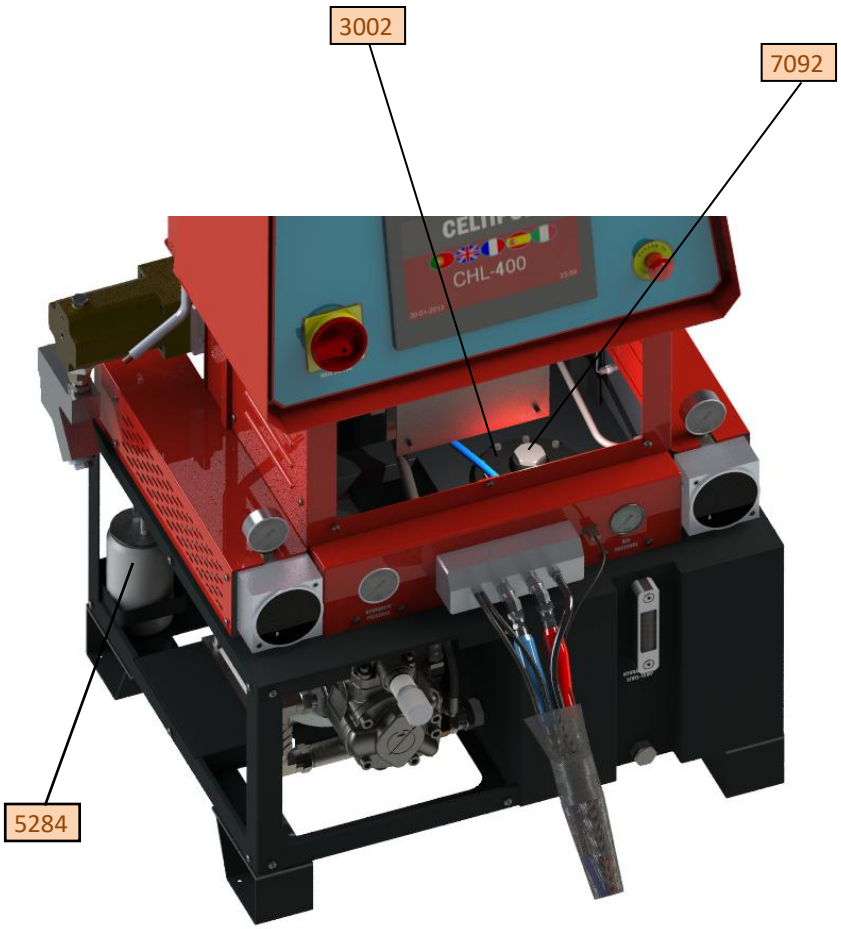

REF.	DESCRIPTION
3002	Manhole cover
5284	Lubrication Liquid Bottle
7092	Oil filler cap

DETALLE: sin carcasas

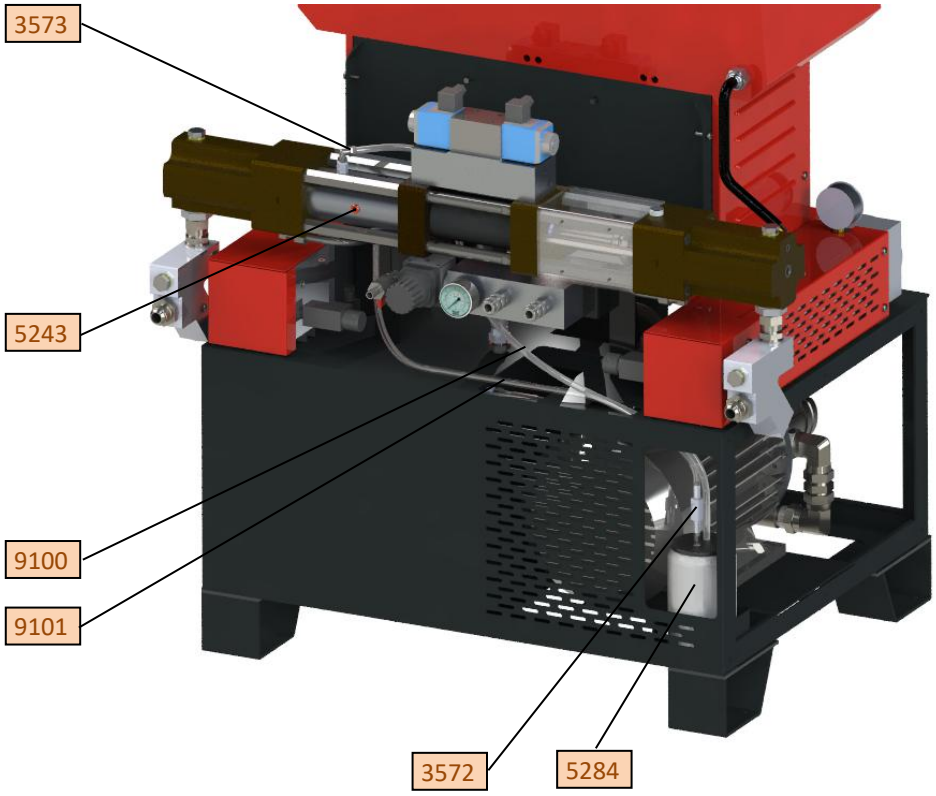

REF.	DESCRIPTION
3572	Input non-return valve (lubrification)
3573	Output non-return valve (lubrification)
5243	Plug 1/4”NPT
5284	Lubrication Liquid Bottle
9100	Polyamide tube 8x1
9101	Polyamide tube 12x1,5

7. PUMPING GROUP EXPLODED VIEW. 8200.

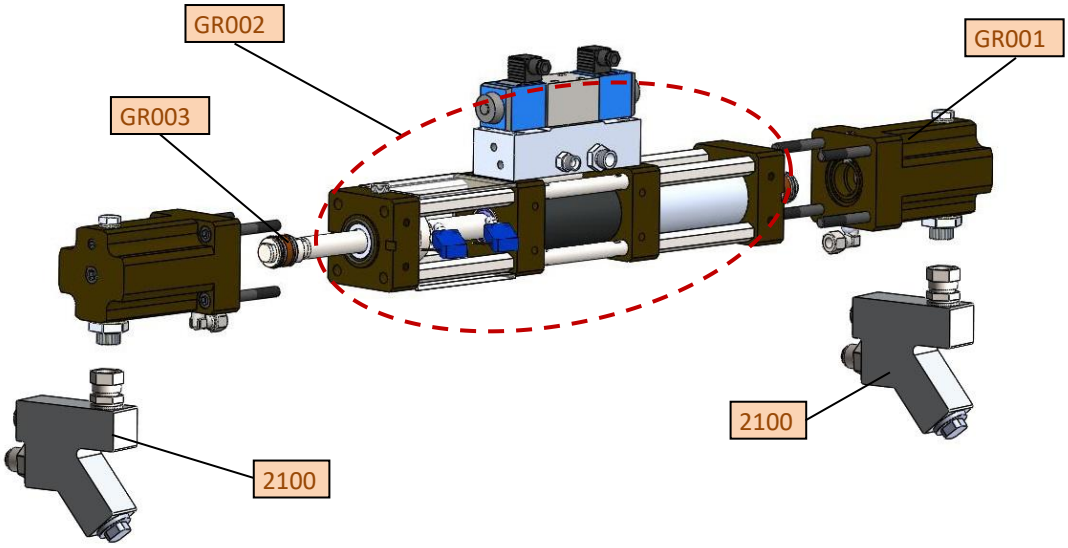

REF.	DESCRIPTION
GR001	Pump head group
GR002	Cylinder group with solenoid valve
GR003	Double piston group
2100	Liquid filter set

Spare KIT Polyol gaskets (3599)		
5065	O-ring Øint40 x 2	x1
5290	Wiper seal 28-38-5-8	x1
5297	O-ring Øint52 x 3	x1
5298	Nylon guide bushing Ø28x15	x1
7701	Rod seal 28-36-5.8	x1
7709	Buffer seal VARISEL Ø28	x1
7713	Polyurethane wiper seal Ø28	x1

Spare KIT Isocyanate gaskets (3600)		
5065	O-ring Øint40 x 2	x1
5290	Wiper seal 28-38-5-8	x1
5293	O-ring Øint60 x 2,5	x2
5297	O-ring Øint52 x 3	x1
5298	Nylon guide bushing Ø28x15	x1
7701	Rod seal 28-36-5.8	x1
7709	Buffer seal VARISEL Ø28	x1
7713	Polyurethane wiper seal Ø28	x1

Spare Kit Polyol piston (3605)		
5299	Piston guide Ø 39.6x10	x1
5301	Buffer seal VARISEL Ø39,6	x2

Spare KIT Isocyanate piston (3606)		
5299	Piston guide Ø 39.6x10	x1
5301	Buffer seal VARISEL Ø39,6	x2

GR001: Pump head group.

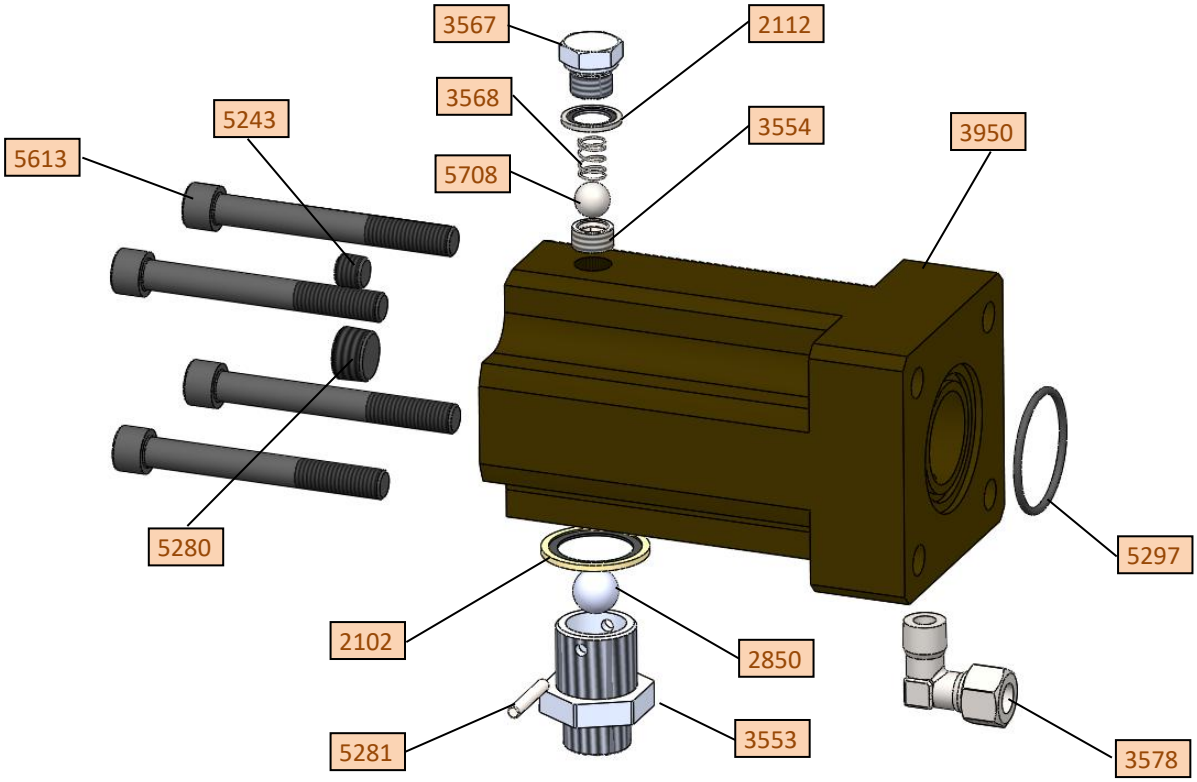

REF.	DESCRIPTION
2102	Watertight washer 1”
2112	Watertight washer 3/8”
2850	Ø18 Sphere
3553	Inlet ball seat
3554	Ball stopper
3567	Plug 3/8” w. spring housing
3568	Spring
3578	Elbow M 3/8”NPT – pipe Ø12
3950	Pump head
5243	Plug 1/4” NPT
5280	Plug 1/2” NPT
5281	Pin Ø5
5297	O-ring Øint52 x 3
5613	Allen screw M12x100
5708	Ø14 Sphere

GR002: Cylinder group with solenoid valve.

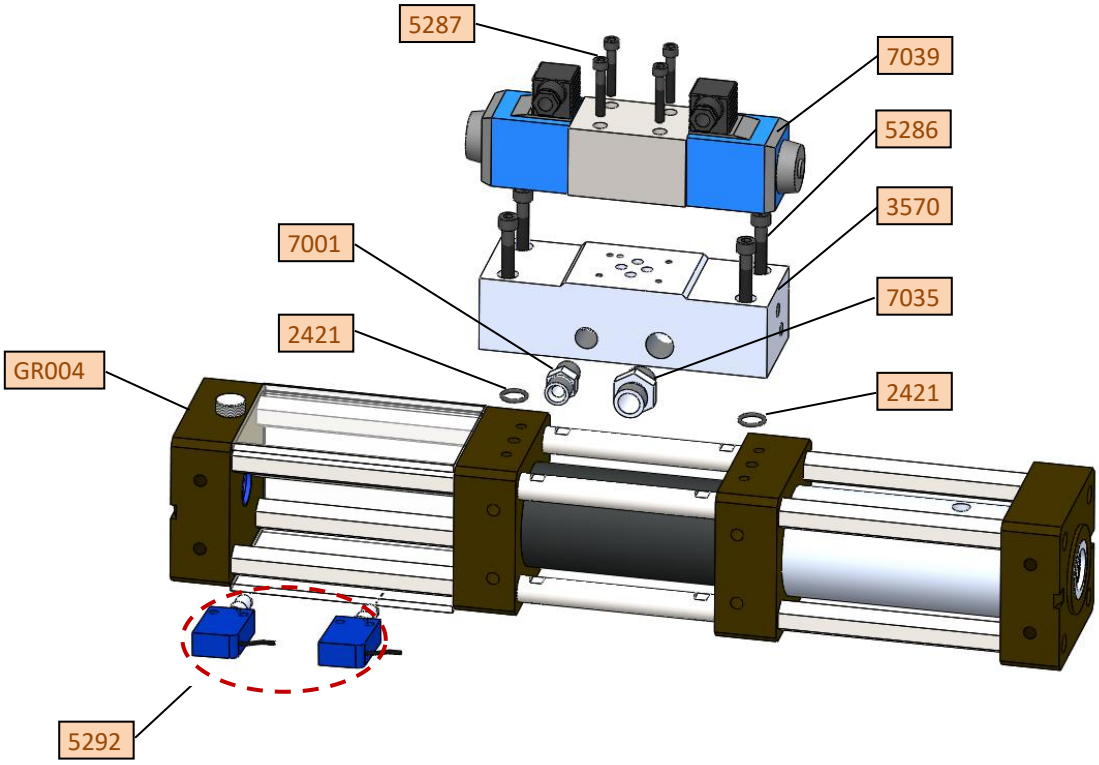

REF.	DESCRIPTION
GR004	Cylinder group
2421	O-ring Øint14 x 3
3570	Solenoid valve base plate
5286	Allen screw M8 x 40
5287	Allen screw M6 x 35
5292	Mechanic limit switch
7001	M-M 3/8”Gas joint
7035	M-M 1/2”Gas joint
7039	Solenoid valve

GR004: Cylinder group.

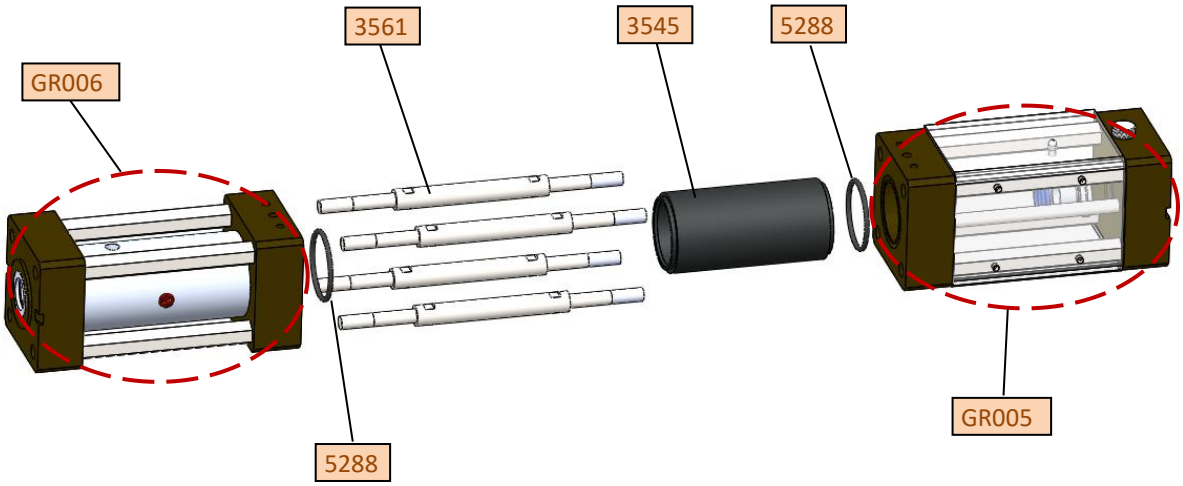

REF.	DESCRIPTION
GR005	End of course group
GR006	Lubrication pump group
3545	Cylinder body
3561	M12 tie rod
5288	O-ring Øint55 x 4

GR005: End of course group.

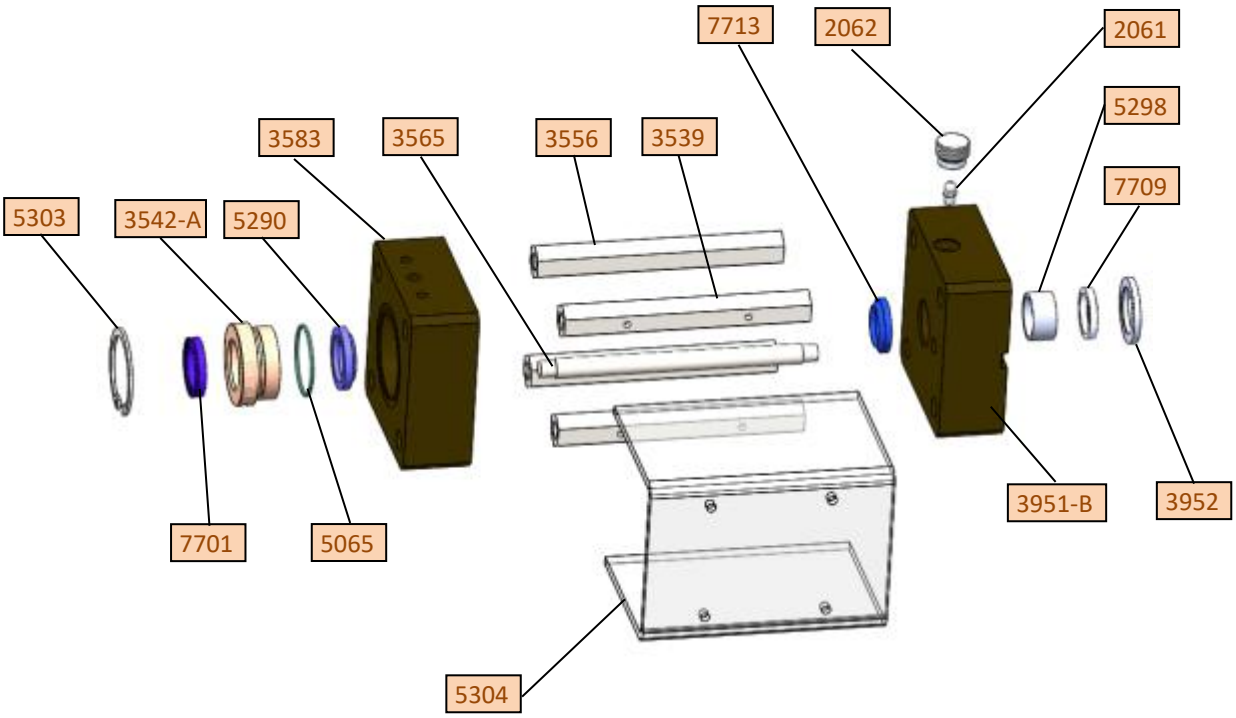

REF.	DESCRIPTION
2061	M6 grease nipple
2062	Grease nipple cover
3539	Hexagonal pillar for protection
3542-A	Bronze guide bushing
3556	Hexagonal pillar
3565	Anti-turn guide
3583	Cylinder head (polyol side)
3951-B	Base (Polyol side)
3952	Closing ring
5065	O-ring Øint40 x 2
5290	Wiper seal 28-38-5-8
5298	Nylon-bronze guide bushing Ø28x15
5303	Security ring Øext53x2
5304	Pump protection
7701	Rod seal 28-36-5.8
7709	Buffer seal VARISEL Ø28
7713	Polyurethane wiper seal Ø28

GR006: Lubrication pump group.

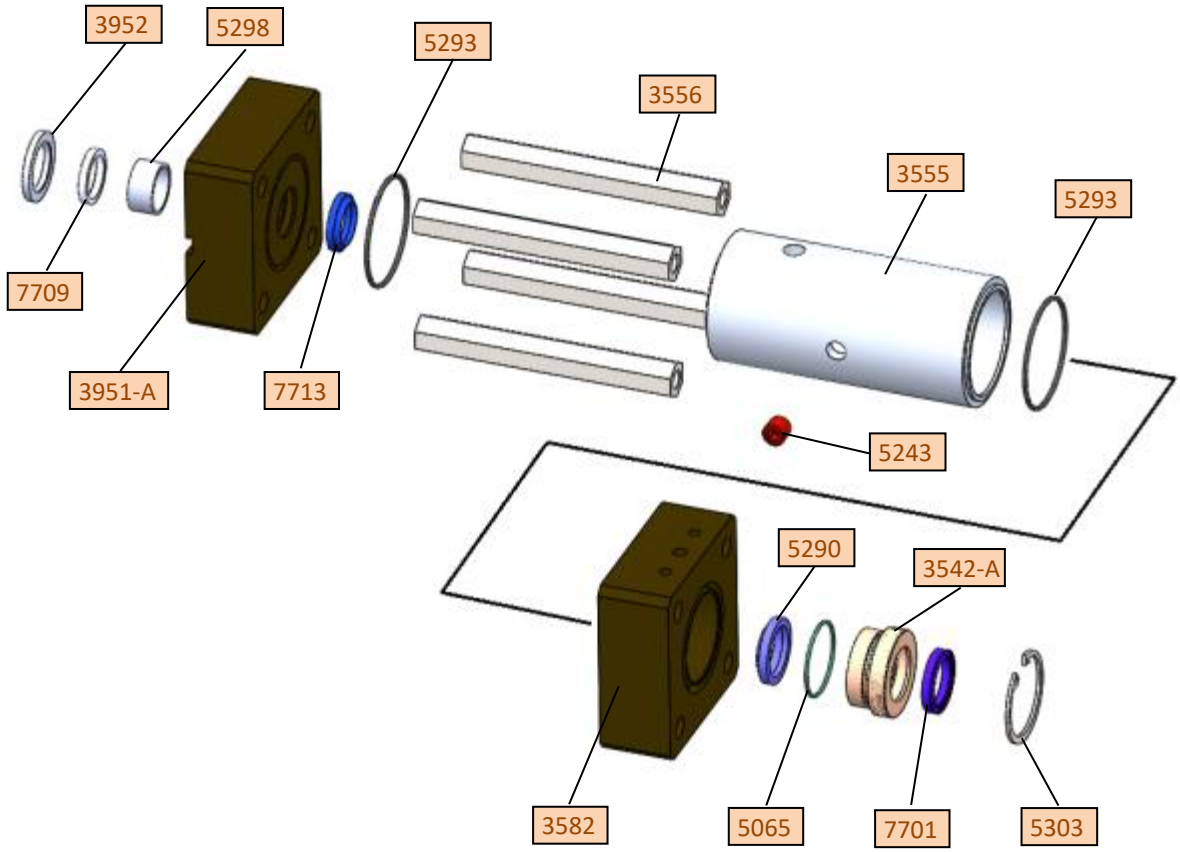

REF.	DESCRIPTION
3542-A	Bronze guide bushing
3555	Lubrication cylinder
3556	Hexagonal pillar
3582	Cylinder head (isocyanate side)
3951-A	Base (isocyanate side)
3952	Closing ring
5065	O-ring Øint40 x 2
5243	Plug 1/4”NPT
5290	Wiper seal 28-38-5-8
5293	O-ring Øint60 x 2,5
5298	Nylon-bronze guide bushing Ø28x15
5303	Security ring Øext53x2
7701	Rod seal 28-36-5.8
7709	Buffer seal VARISEL Ø28
7713	Polyurethane wiper seal Ø28

GR003: Double piston group.

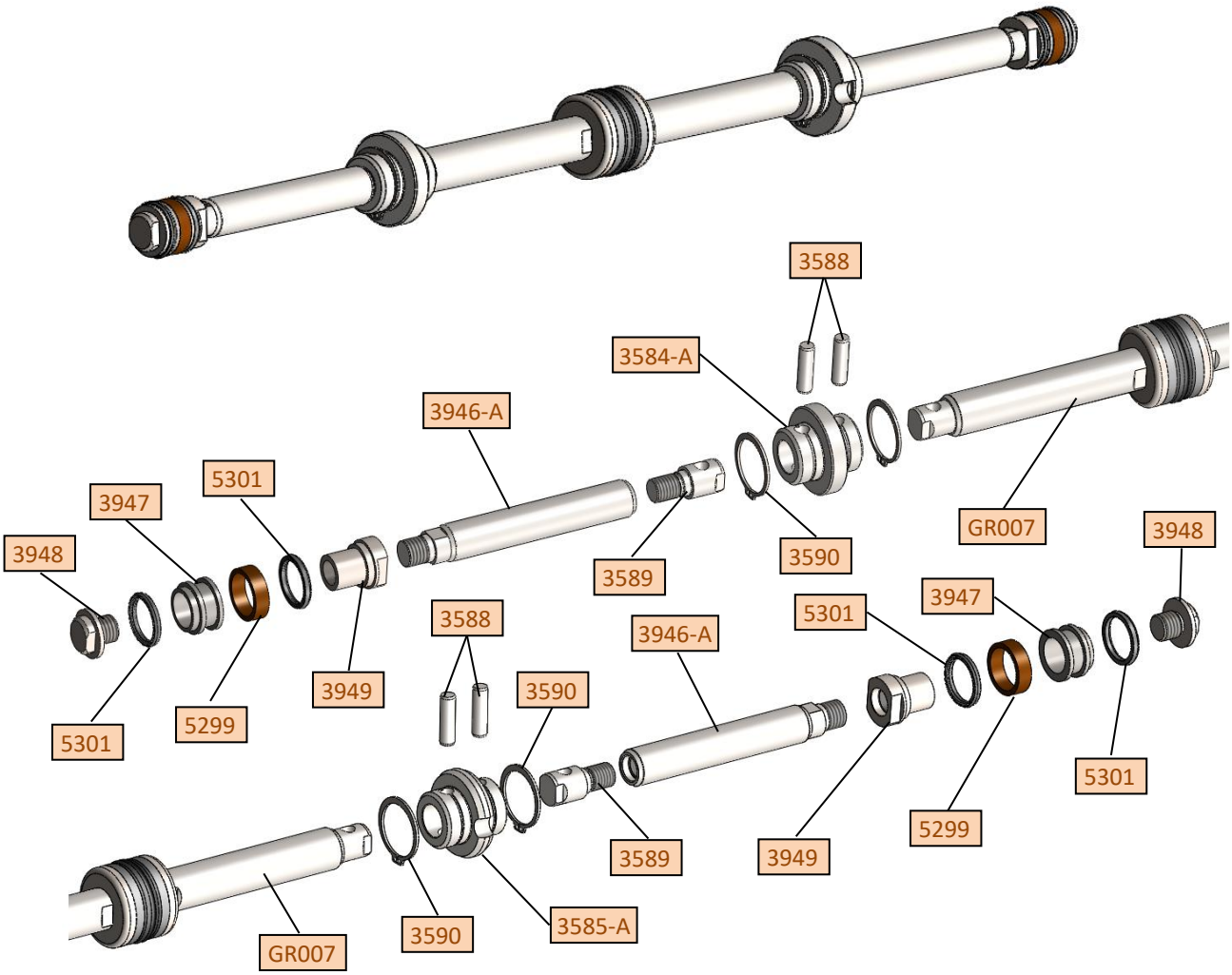

REF.	DESCRIPTION
GR007	Hydraulic piston group
3584-A	Piston rod union lubrication side
3585-A	Piston rod union end of stroke side
3588	Pin Ø10x34
3589	Piston union head
3590	Elastic ring for fastening the pin
3946-A	Piston rod
3947	Guide and buffer seal housing
3948	Piston Head Cap
3949	Piston Head
5299	Piston guide Ø 39,6x10
5301	Buffer seal VARISEL Ø39,6

GR007: Hydraulic piston group

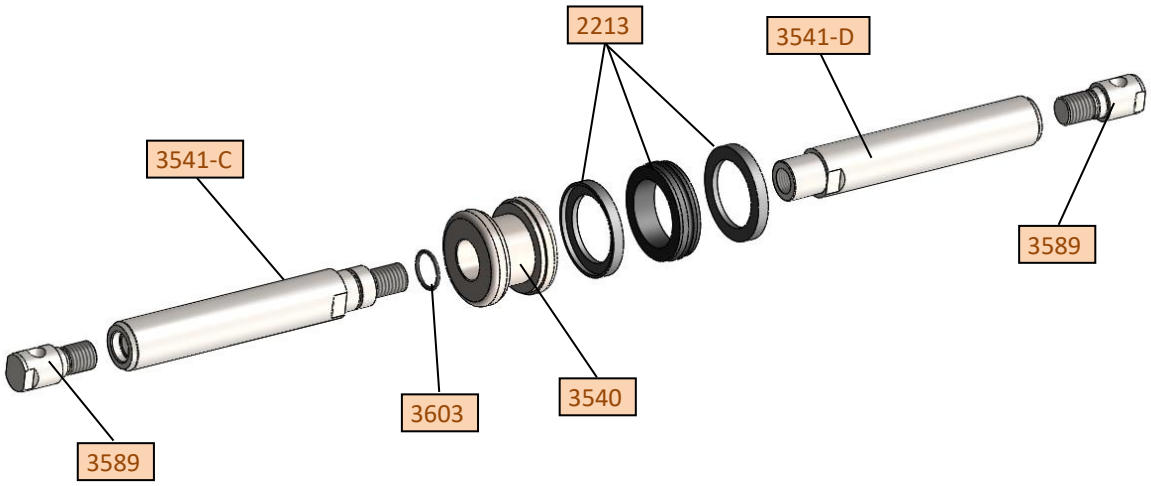

REF.	DESCRIPCIÓN
2213	Piston seal Spare KIT: piston seal (x2) + piston guide (1)
3540	Pistón
3541-C	Piston rod (isocyanate side)
3541-D	Piston rod (polyol side)
3589	Piston union head
3603	O-ring Øint19 x 2

8. LIQUID FILTER EXPLODED VIEW 2100

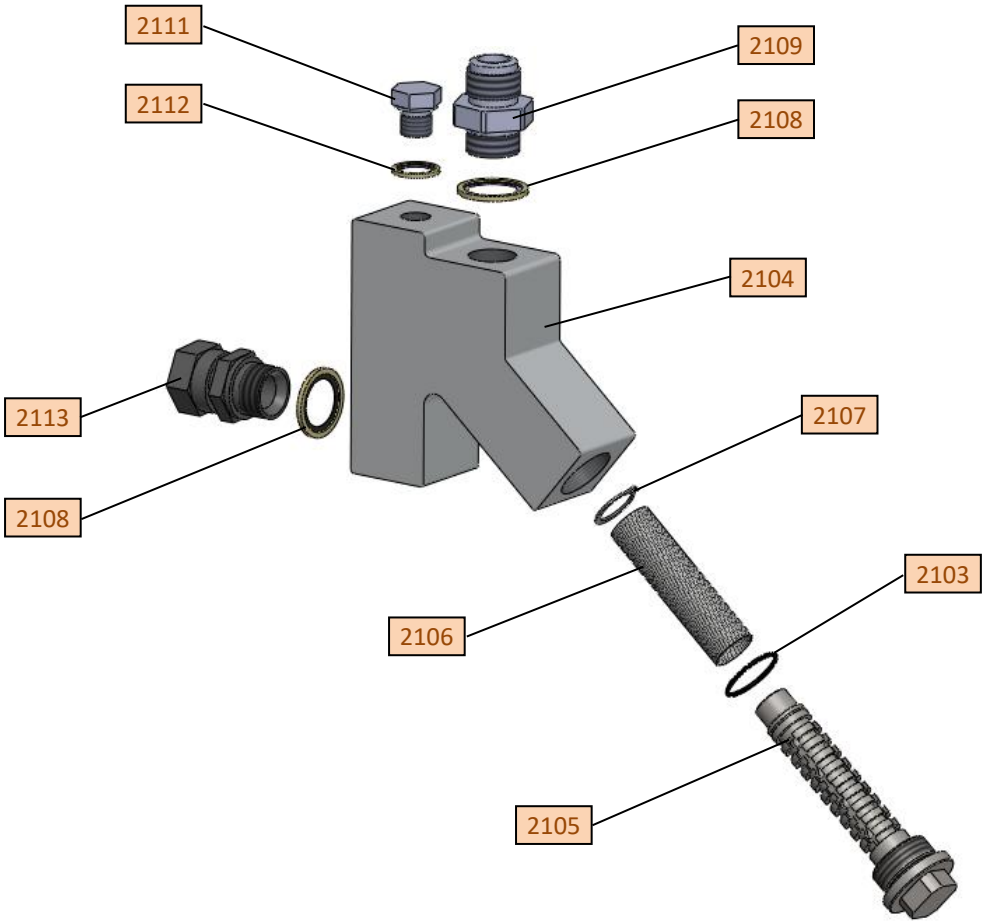

REF.	DESCRIPTION
2103	O-ring Øint30 x 2
2104	Filter body
2105	Filter holder
2106	Filter
2107	Safety ring Ø20 x 1,2
2108	Watertight washer 3/4”
2109	M-M 3/4”G-1 1/16”SAE joint
2111	Plug 3/8”
2112	Watertight washer 3/8”
2113	M-F 3/4”Gas joint

SPARE KIT (2208)	
2103	O-ring Øint 30 x 2
2106	Filter

9. AIR DISTRIBUTOR SET 2332.

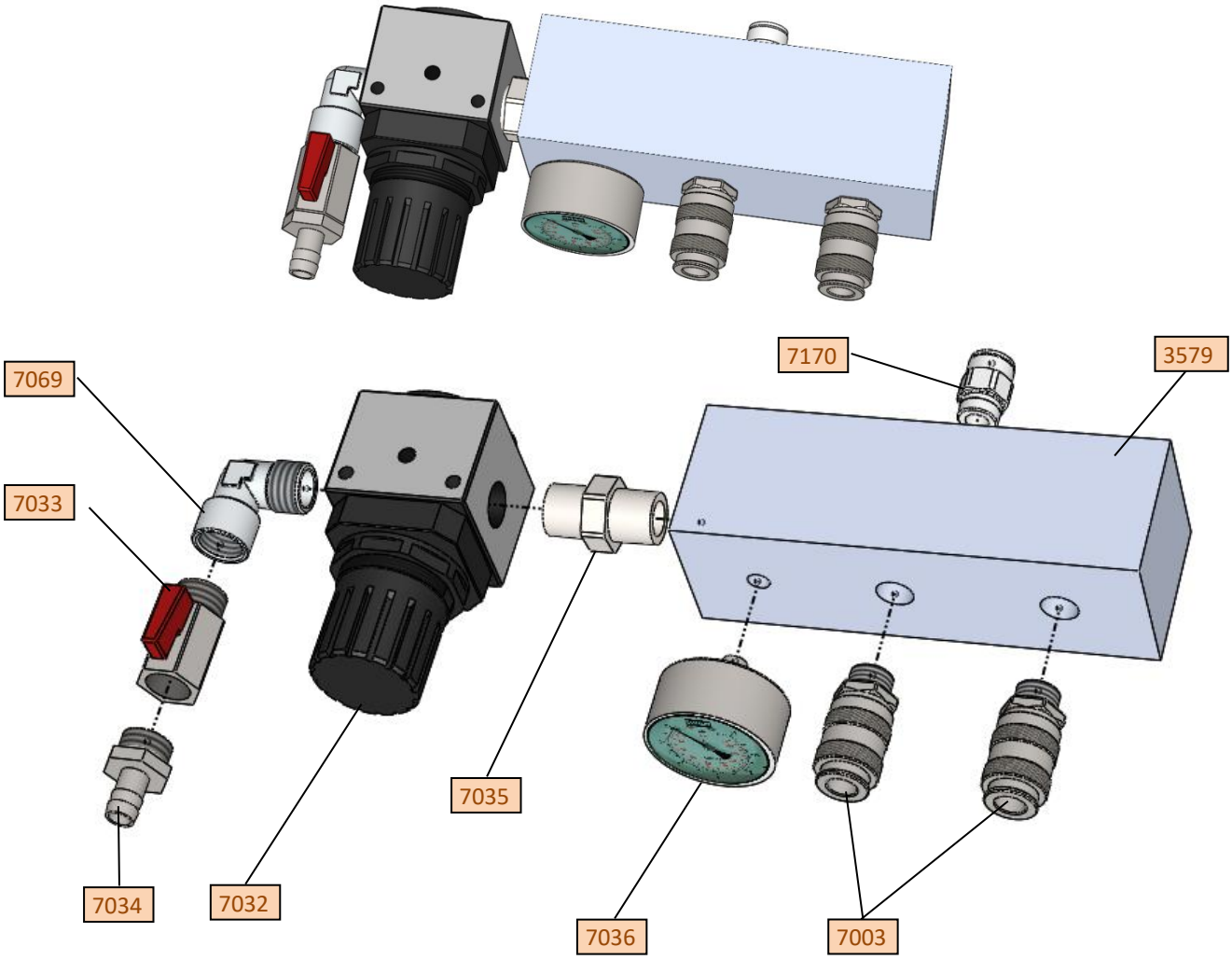

REF.	DESCRIPCIÓN
3579	Air distributor
7003	Female quick connector 3/8”
7032	Air regulator 1/2” MC202-R00
7033	Valve 1/2”
7034	Spike 1/2”
7035	M-M 1/2”G joint
7036	Air manometer Ø51
7069	Elbow M-F 1/2”NPT
7170	Quick conector G3/8” - Ø12

10. LIQUID HEATER EXPLODED VIEW

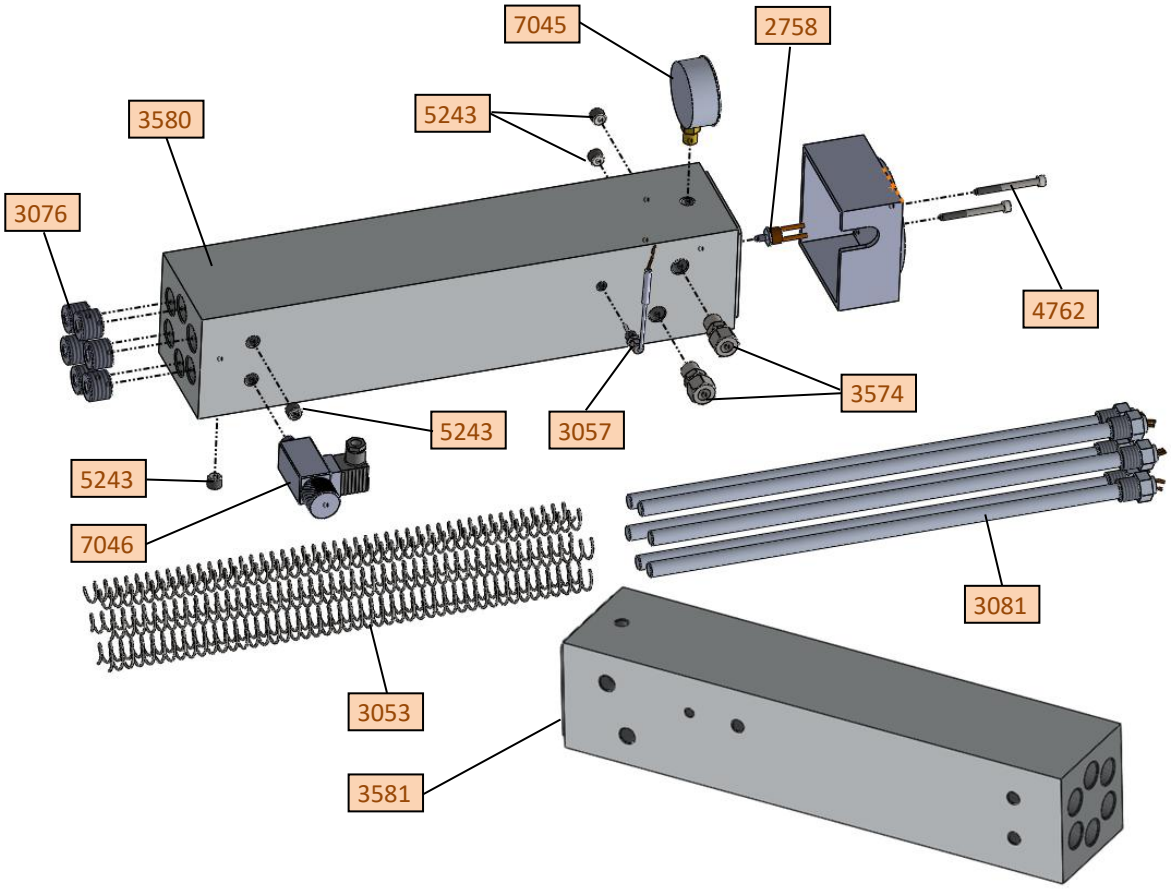

REF.	DESCRIPCIÓN
2758	Thermostat
3018	Isocyanate Heater cover
3053	Ø14 Spring for resistance
3056	Thermocouple probe
3057	Probe connector
3076	3/4”NPT (x6) plugs
3081	Ø14x485 1500W (x6) resistance
3574	3/8” NPT joint – Ø12 tube connector
4762	Isocyanate Heater
3580	Polyol Heater
3581	Allen screw M6 x 60
5243	1/4” NPT plug
7045	Pressure Gauge Ø62
7046	Presostat

11. HIDRAULIC PUMP AND SLEEVES

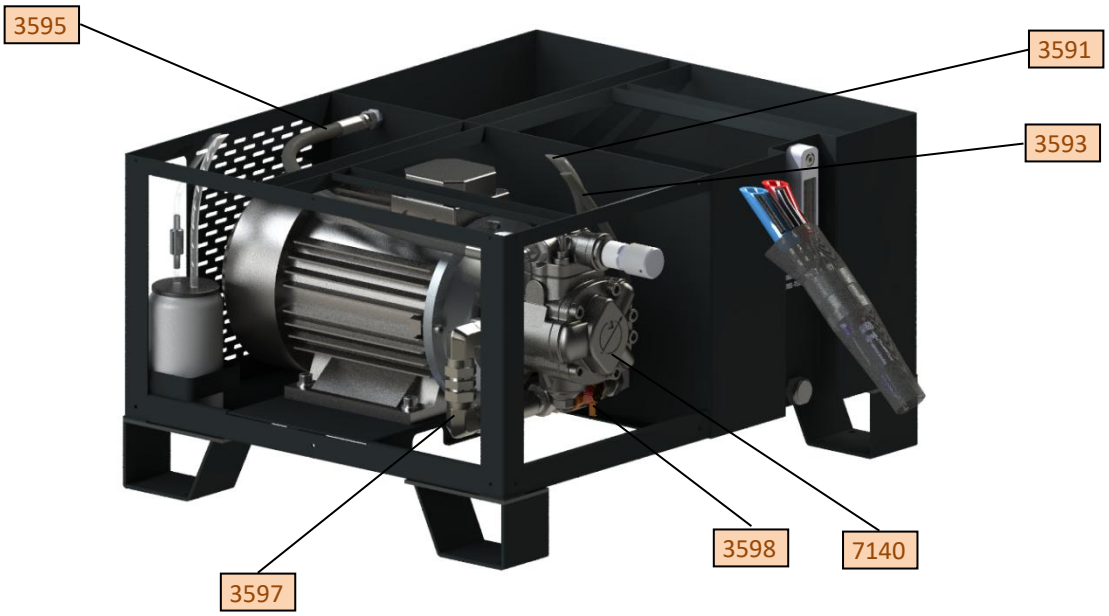

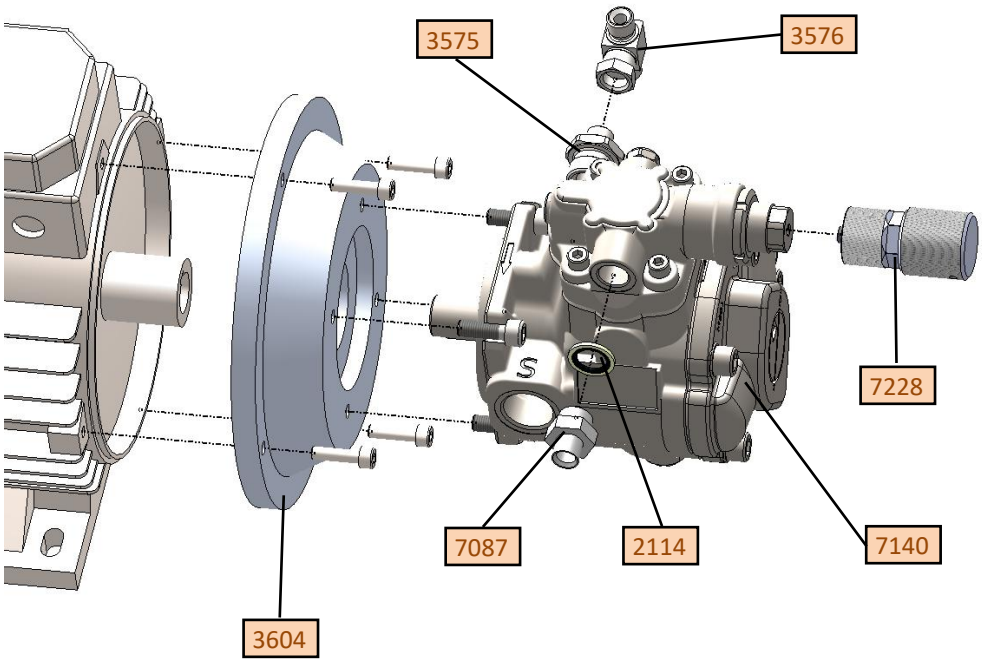

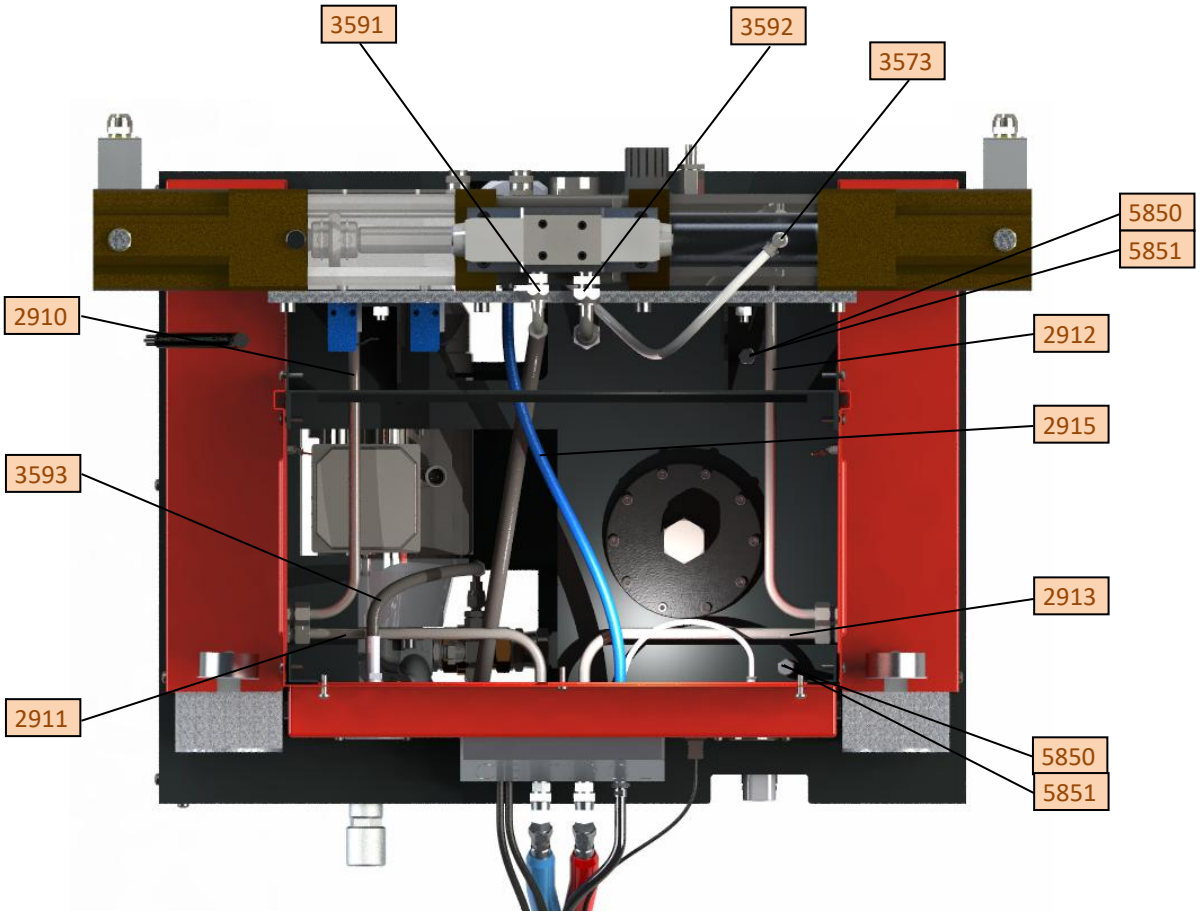

Ref.	DESCRIPCIÓN
2910	Polyol heater inlet hydraulic pipe
2911	Polyol heater outlet hydraulic pipe
2912	Isocyanate heater inlet hydraulic pipe
2913	Isocyanate heater outlet hydr. pipe
2915	Air pressure gauge hose
3573	Outlet DOP check valve
3591	Boost pump sleeve 3/8”
3592	Return tank sleeve 1/2”
3593	Hidraulic pressure gage sleeve 1/4”
3595	Recirculation sleeve 3/8”
3597	Suction pump set1”
3598	Ball valve 1”
5850	Oil tank breather
5851	Vent plug

Ref.	DESCRIPCIÓN
2114	Watertight washer 1/2”
3575	Reduction M-M 3/4”G – 3/8”G
3576	Tee F-M-M 3/8”G
3604	Motor-pump adapter
7064	Electrical motor 7,5 Kw
7087	M-M 1/2”G-3/8”G reduction
7140	Pump PH P 1 20-25-32 FHRM
7228	Hydraulic pump regulation

12. HOSE.

8110 MACHINE CONNECTION STRETCH

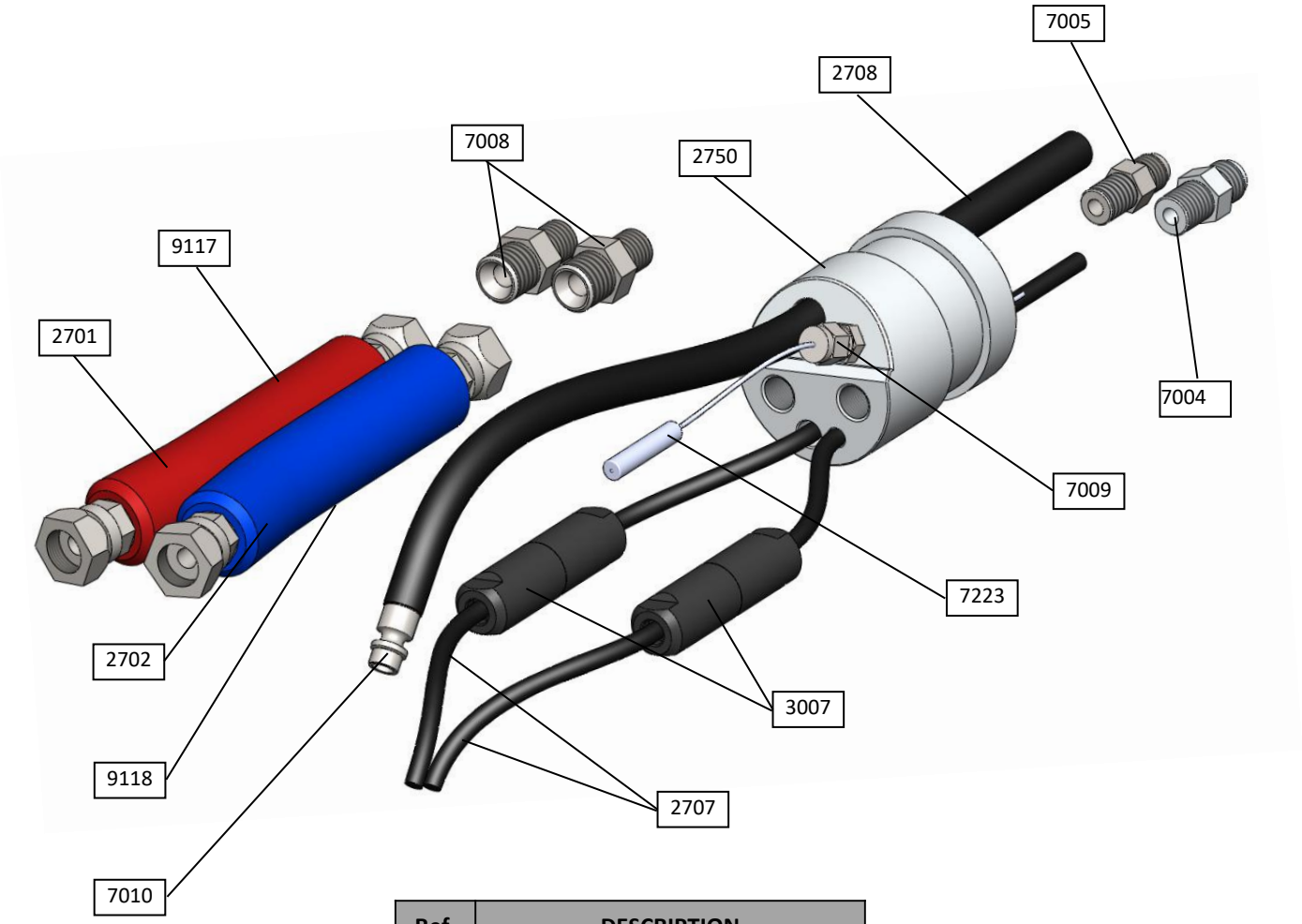

Ref.	DESCRIPTION
2701	ISO line
2702	POLY line
2707	Hose wire
2708	Hose air conduit (tube Ø6)
2750	Anterior connecting block
3007	Electrical connector
7004	M 1/4'' NPT-M 1/2'' SAE joint
7005	M 1/4'' NPT-M 9/16'' SAE joint
7008	M 1/4'' NPT- M G3/8'' joint
7009	Probe connector unit
7010	Swift air connector male
7223	Temperature probe
9117	Red heat shrink tubing (ISO)
9118	Blue heat shrink tubing (POLY)

HOSE FITTING.

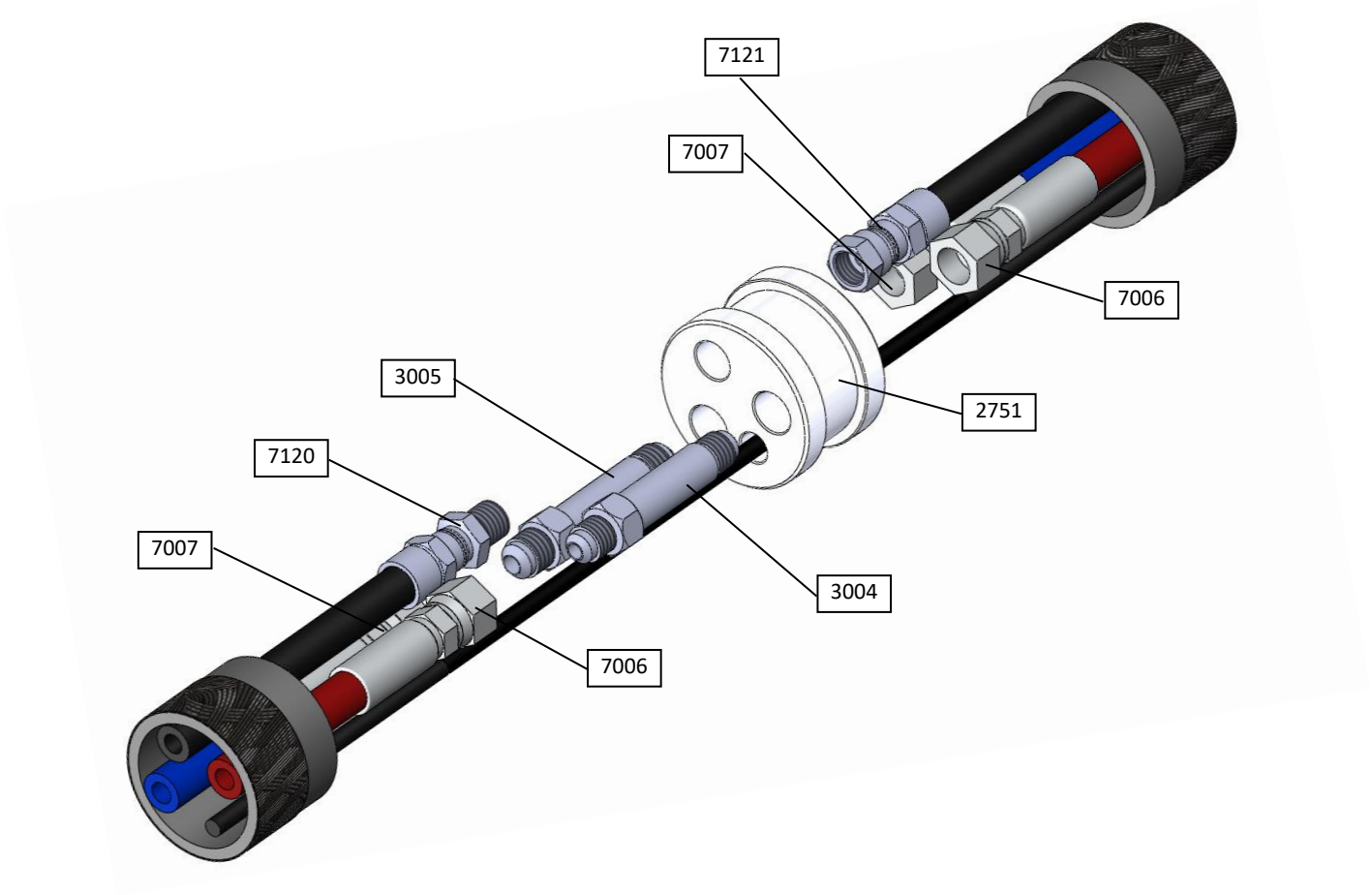

Ref.	DESCRIPTION
2751	Insulator separator
3004	ISO hose fitting
3005	POLY hose fitting
7006	Connector 5/16 hose - 1/2
7007	Connector 5/16 hose - 9/16
7120	Male air connector
7121	Female air connector

GUN CONNECTION STRETCH.

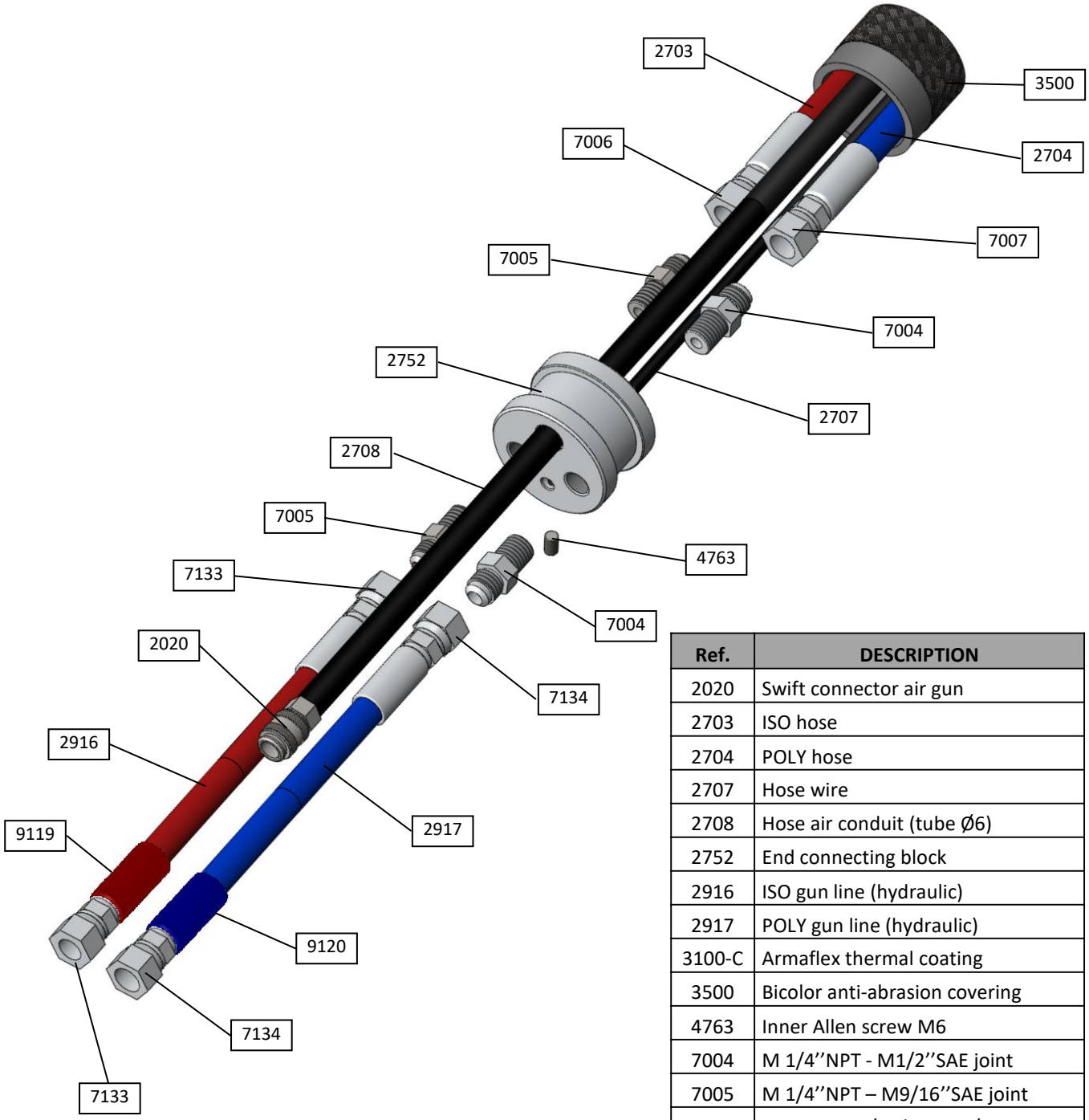

Ref.	DESCRIPTION
2020	Swift connector air gun
2703	ISO hose
2704	POLY hose
2707	Hose wire
2708	Hose air conduit (tube Ø6)
2752	End connecting block
2916	ISO gun line (hydraulic)
2917	POLY gun line (hydraulic)
3100-C	Armaflex thermal coating
3500	Bicolor anti-abrasion covering
4763	Inner Allen screw M6
7004	M 1/4''NPT - M1/2''SAE joint
7005	M 1/4''NPT – M9/16''SAE joint
7006	Connector 5/16 hose - 1/2
7007	Connector 5/16 hose - 9/16
7133	Connector 1/4 hose - 1/2
7134	Connector 1/4 hose - 9/16
9119	Red heat shrink tubing (ISO)
9120	Blue heat shrink tubing (POLY)

13. ELECTRICAL CONTROL PANEL.

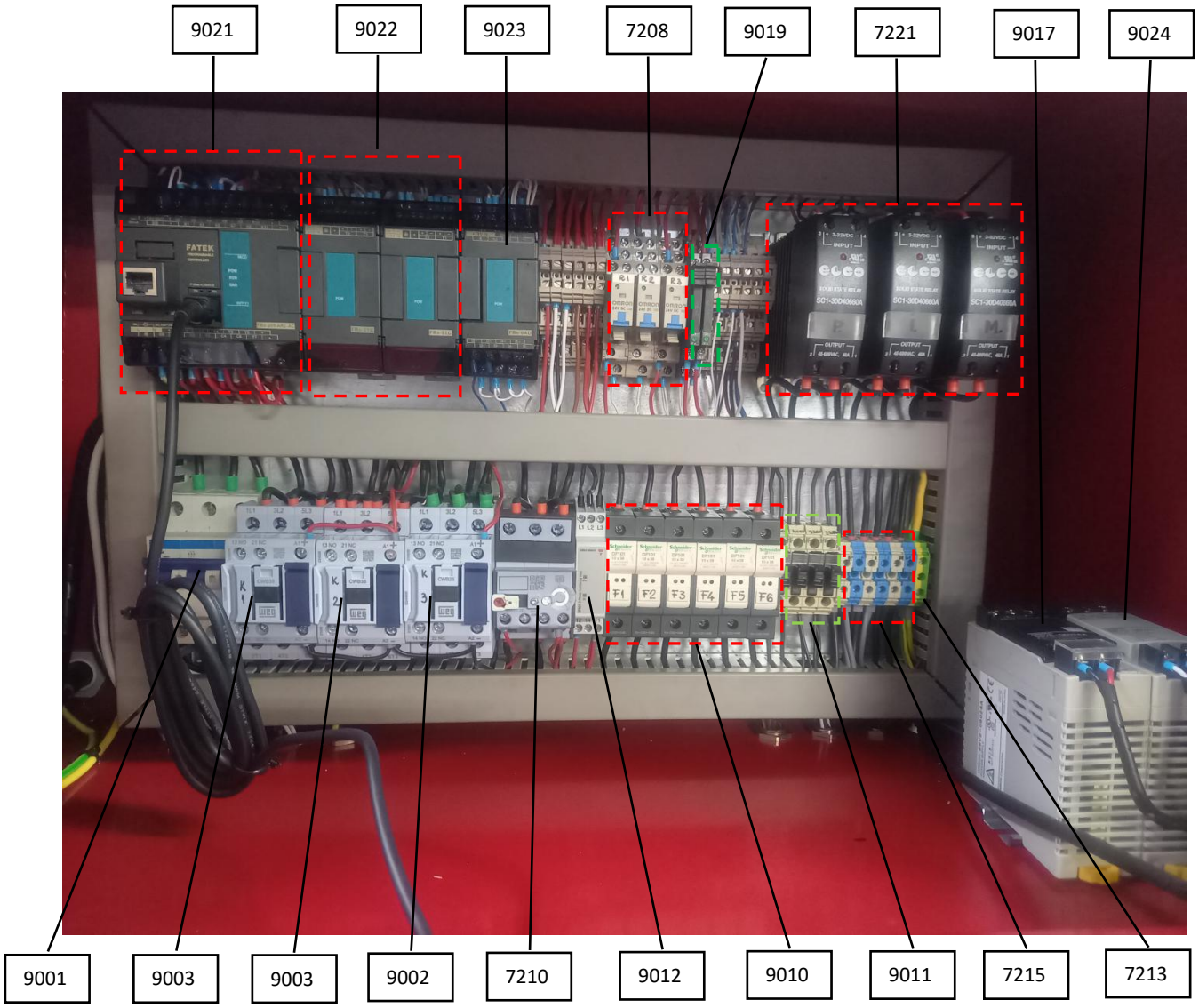

7208 Two-contact Relays	9011 Glass fuses 2A
7210 Thermal Relay	9012 Three-Phase monitoring relay
7213 Earth terminal	9017 Power supply w. display 220/24V
7215 Heater connection terminals	9019 Solid state relay 8A
7221 Solid state relays	9021 PLC
9001 General magnetothermal 3x63A	9022 PLC Temperature module
9002 Contactor 25A	9023 PLC Module
9003 Contactor 38A	9024 Power supply 220/24V (solenoid v)
9010 Fuses 25A	

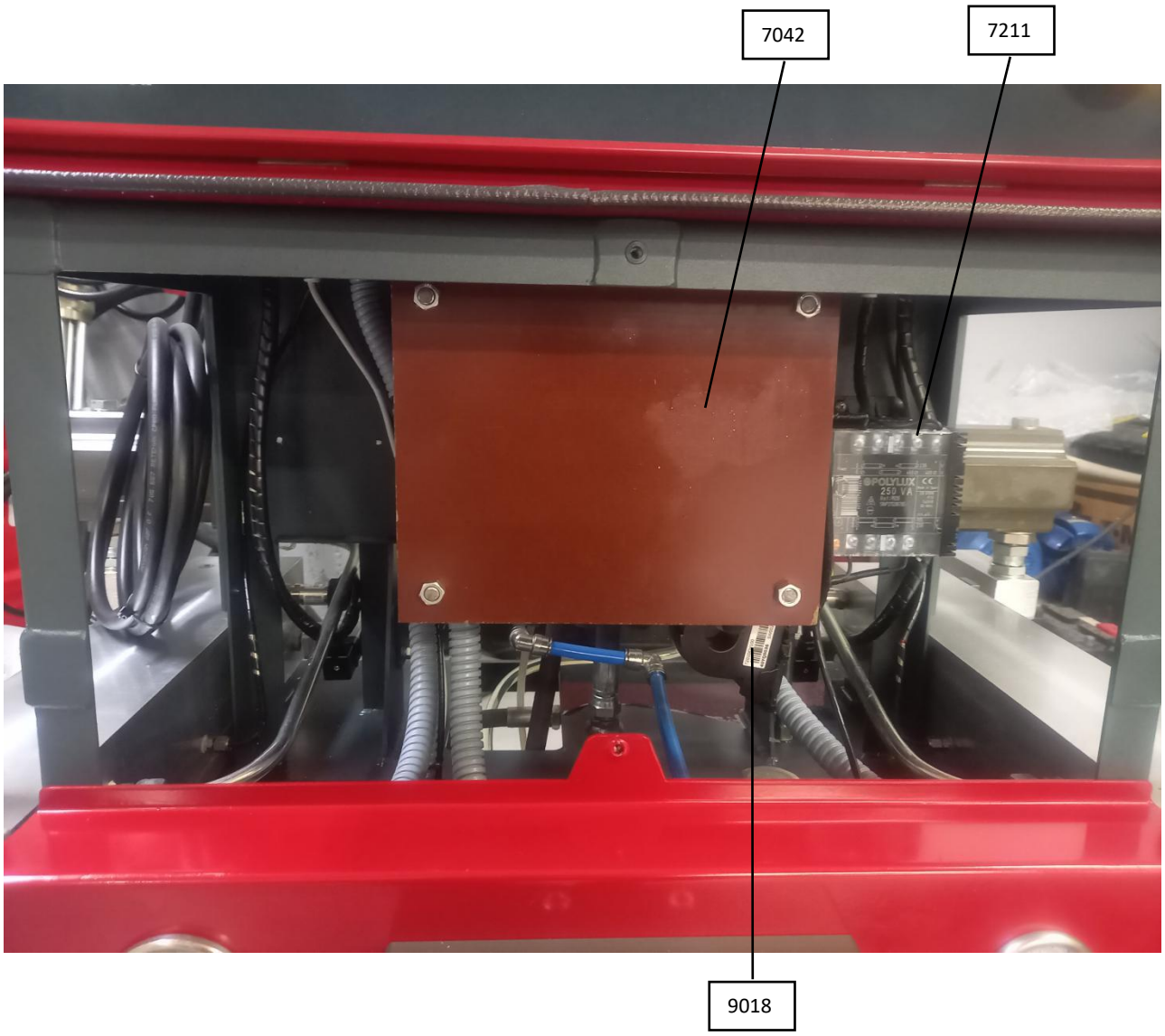

7211 Control transformer	
7042 Hose transformer 6000VA	
9018 Electronic transformer for PLC	

14. ELECTRICAL DIAGRAMS.

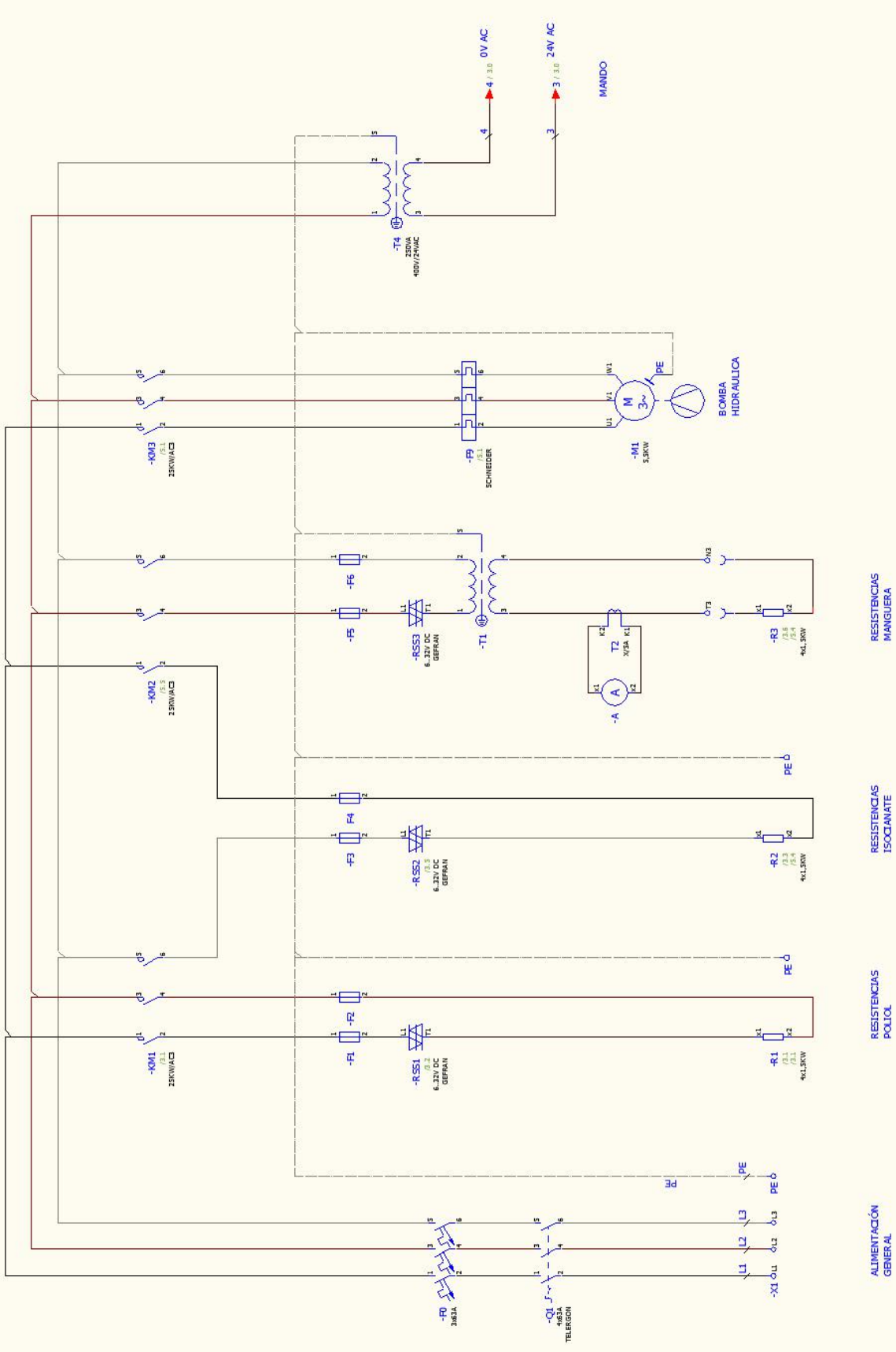

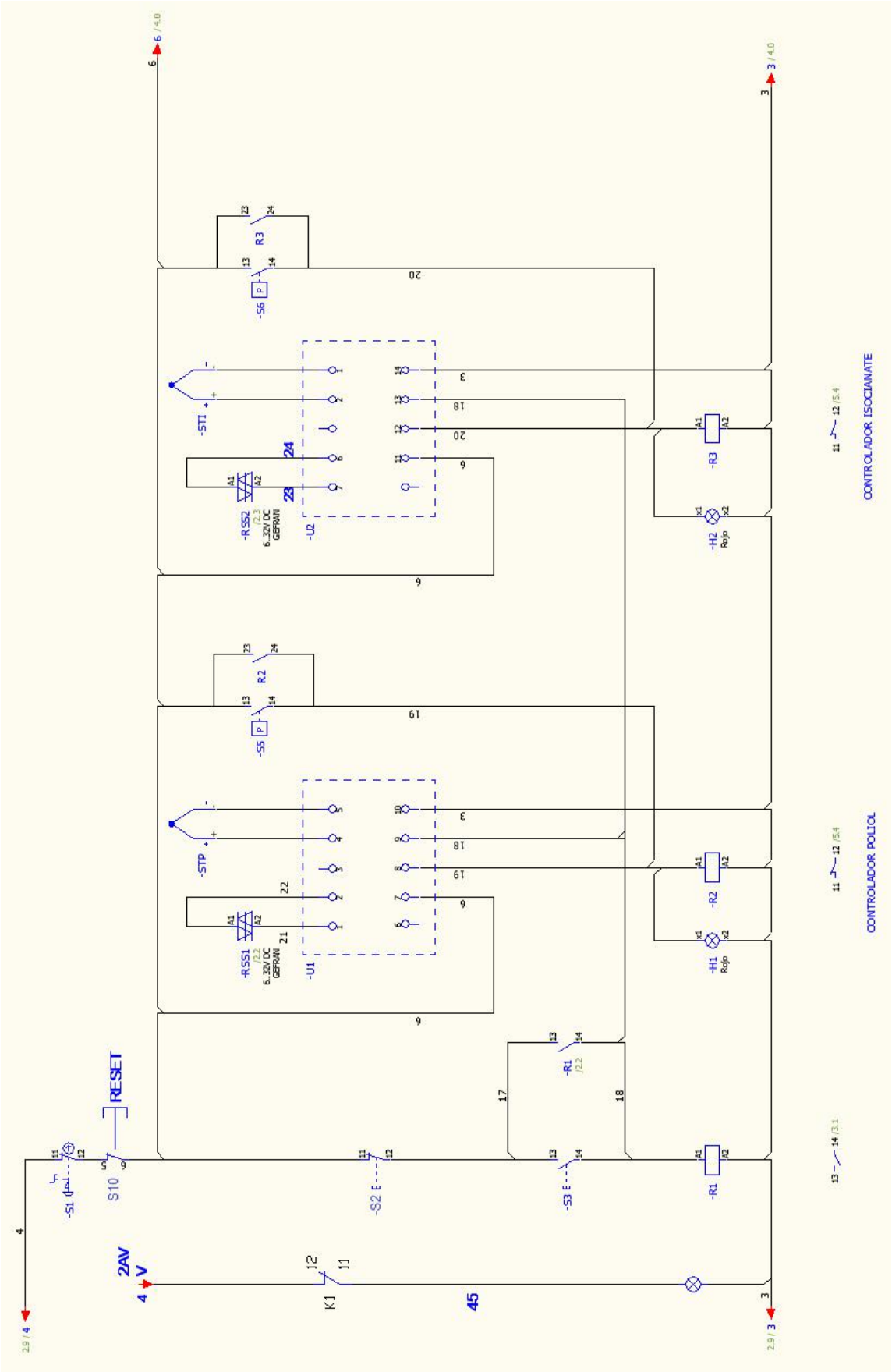
RESET
S10
-S1
2AV
4 V
K1
45
-S2
-S3
-R1
-R2
-R3
-H1
-H2
-U1
-U2
-STP
-STI
-S5
-S6
-RSS1
-RSS2
CONTROLADOR POLIOL
CONTROLADOR ISOCIANATE

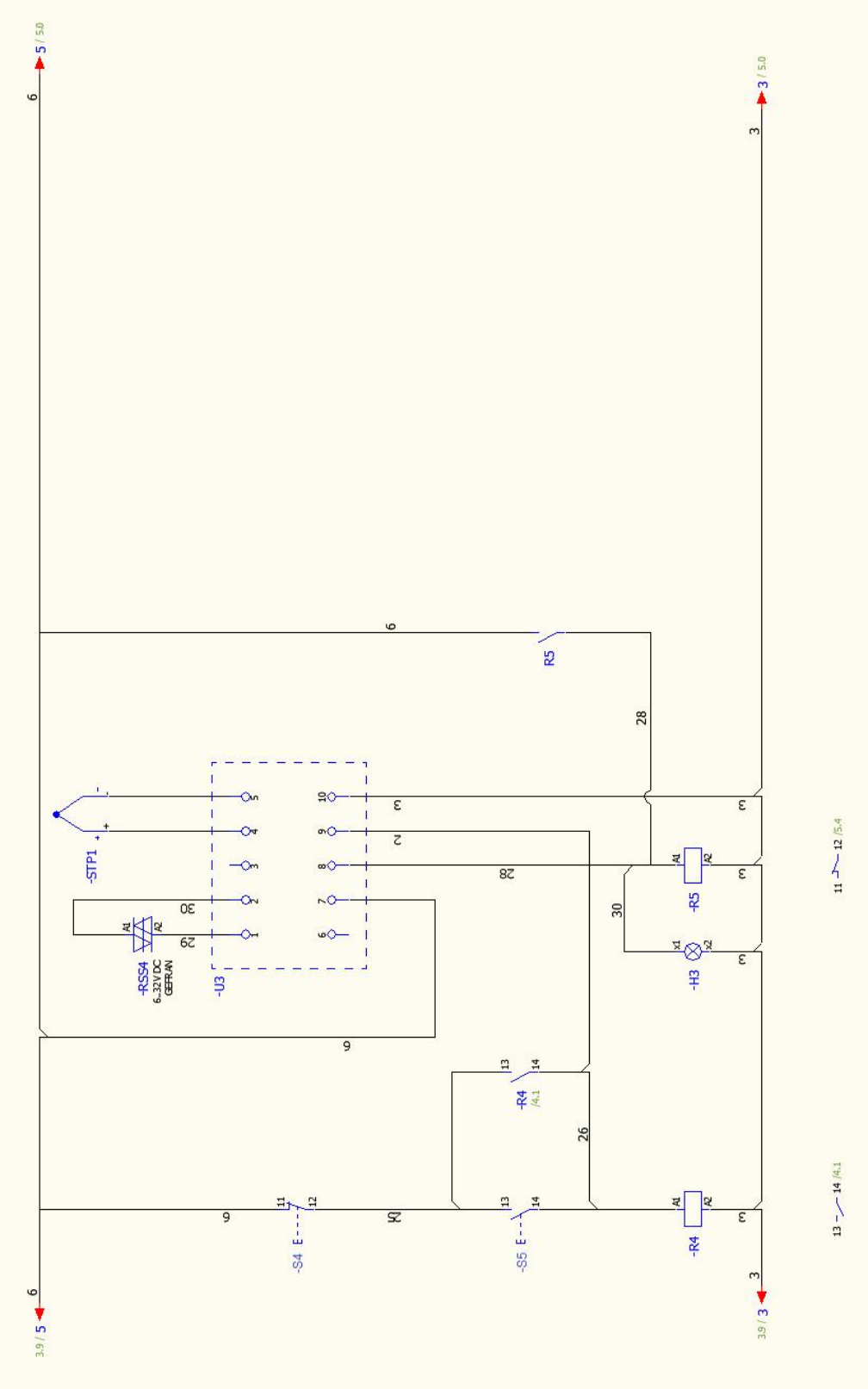
-STP1
-RSS4
6..32V DC
GEFRAN
-U3
-S4
-S5
-R4
-R5
-H3
R5
5 / 5.0
3 / 5.0
3.9 / 5
3.9 / 3
12 /5.4
14 /4.1

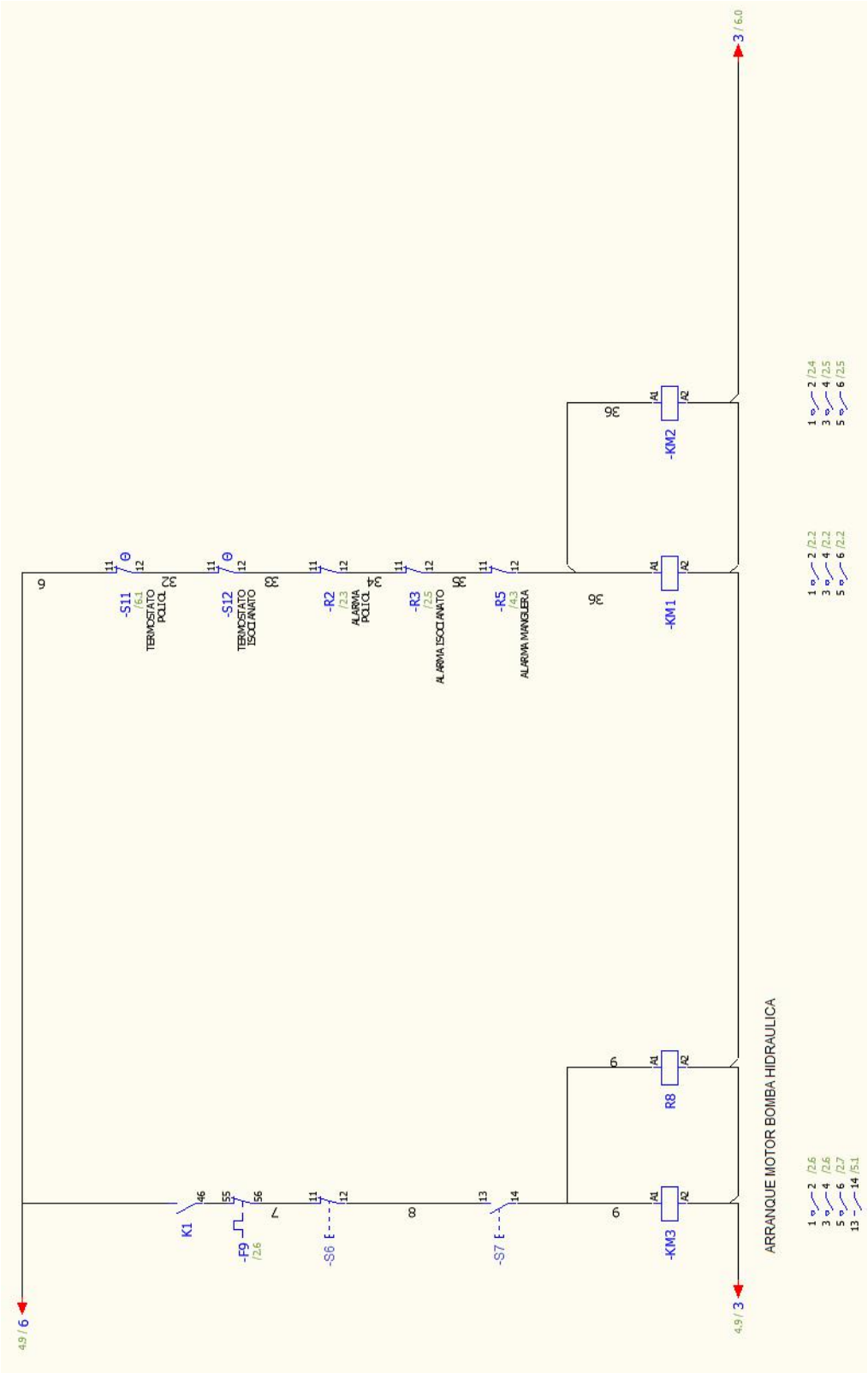
4.9 / 6
-S11
TERMOSTATO POLIGO
-S12
TERMOSTATO ISOCIANATO
-R2
ALARMA POLIGO
-R3
ALARMA ISOCIANATO
-R5
ALARMA MANGUERA
K1
-F9
-S6
-S7
-KM3
R8
-KM1
-KM2
ARRANQUE MOTOR BOMBA HIDRAULICA
4.9 / 3
3 / 6.0

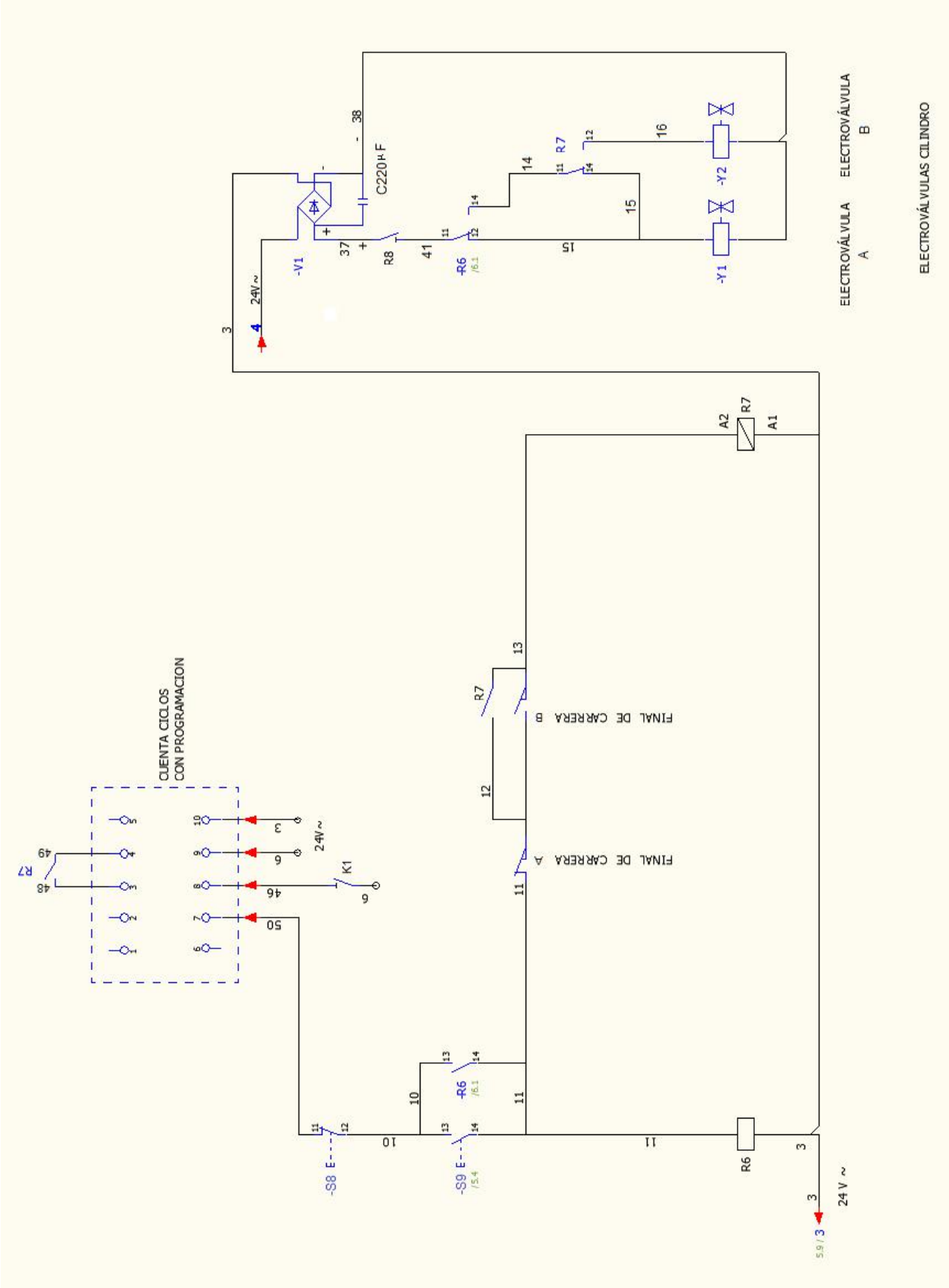
ELECTROVÁLVULAS CILINDRO
ELECTROVÁLVULA A
ELECTROVÁLVULA B
-Y1
-Y2
R7
16
15
14
C220µF
-V1
24V~
R8
41
37
38
-R6
/6.1
A2
A1
FINAL DE CARRERA A
FINAL DE CARRERA B
CUENTA CICLOS
CON PROGRAMACION
K1
-S8 E
-S9 E
/5.4
R6
24 V ~
5.9 / 3

15. MANAGING THE TOUCH SCREEN.

Starting screen.

When the machine is turned on, the home screen appears. To access the operation of the machine, you must select a language.

a - **Language selection**. By cliking on one of the flags, you will access the main screen in the corresponding language.

b - **Machine model**.

c - **Date**

d - **Time**

Main screen.

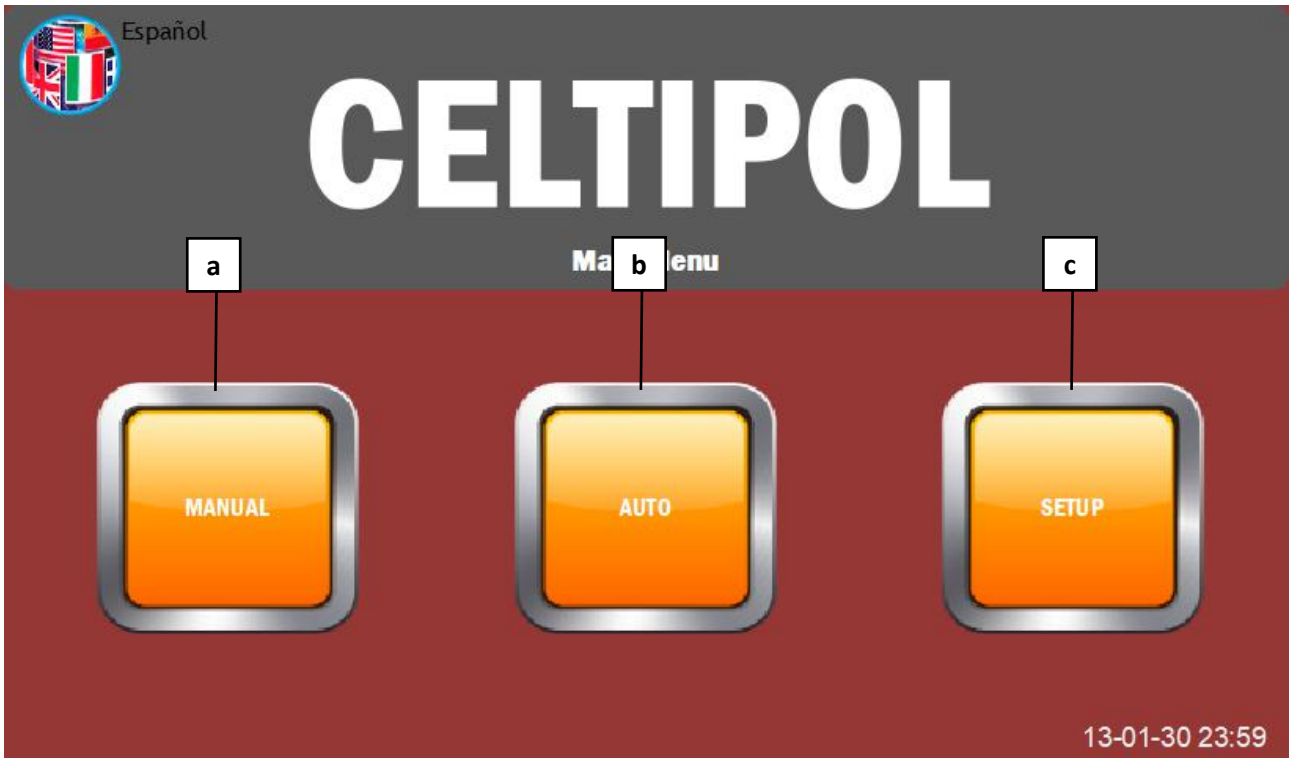

Selecting a language displays the main screen in the selected language.

a -**Manual operation**. Pressing this button accesses the manual operating mode.

b -**Automatic operation**. Pressing this button accesses the automatic operating mode.

c -**Setup**. Clicking on the button accesses the configuration menu of themachine. You need to enter with a username and password to access the configuration menu.

d - **Return to the home screen menu** (language selection)

Manual operation.

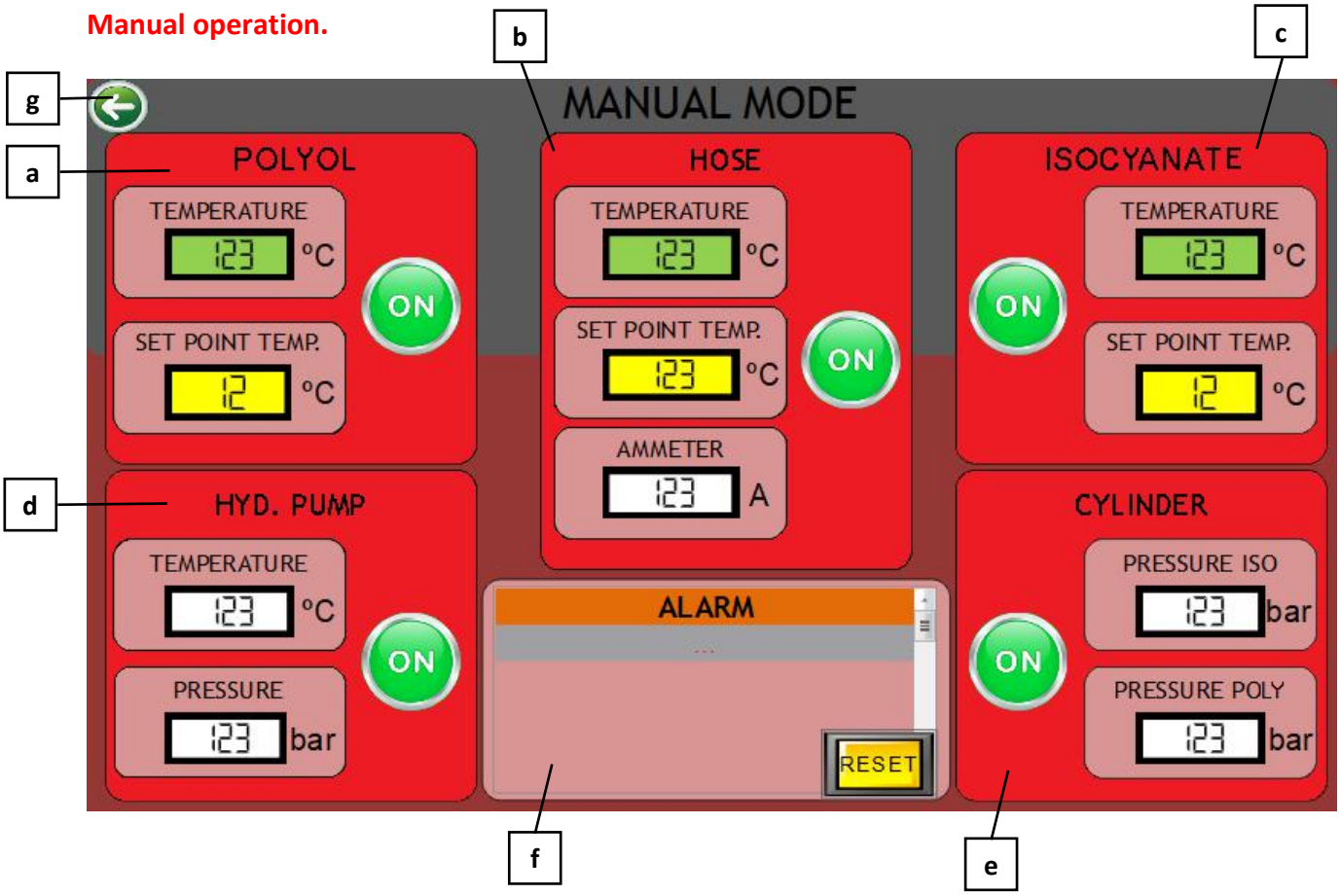

The manual operation screen allows the machine to be operated with the possibility of modifying the values of the Isocyanate, Polyol and hose temperatures. On the operation screen you can also turn on or off the hydraulic-pump, or the product dosing cylinder. In the alarms section you can view the cause that cause the machine to stop.

a -POLYOL.

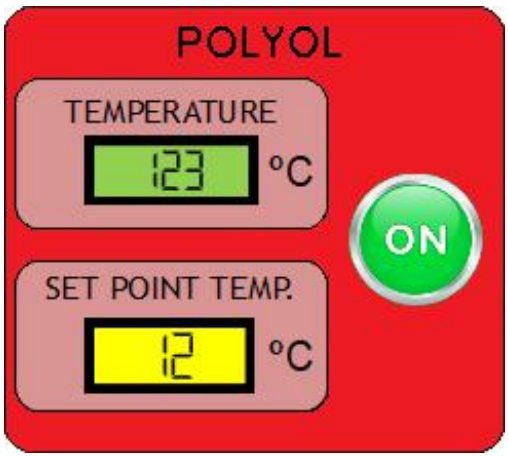

TEMPERATURE: Shows the value of the current POLYOL temperature. The box that marks the temperature blinks in light green when the heater is in operation.

SET POINT TEMP: Allow you to change the temperature of the POLYOL . To do this, click on the yellow box and then change the value.

ON (OFF) button: Allows you to turn the heating of the POLYOL on or off.

The color of the background of the box of the polyol indicator indicates heater operation. If is is GREEN, it means it is on. If it is RED, it means it is off.

b -HOSE.

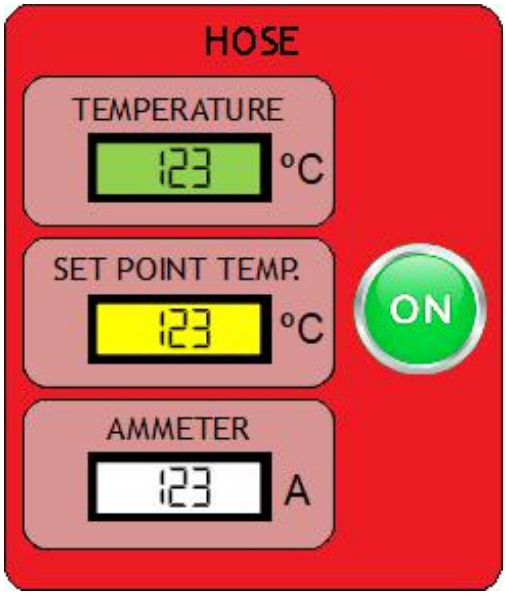

TEMPERATURE: Shows the current temperature value of the HOSE. The temperature box blinks in light green when the hose heating comes on operation.

SET POINT TEMP: Allow you to modify the HOSE temperature. To do this click on the yellow box and then modify the value.

AMMETER: Shows the current value of the hose.

ON (OFF) button: Allows you to turn the HOSE heating on or off.

The backgrounf of the HOSE indicator box indicates the heating operation. If it is GREEN, it means that it is heating. If it's RED, it means it's off.

c -ISOCYANATE.

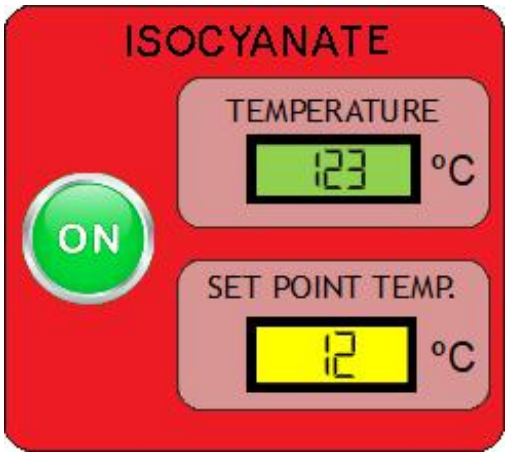

TEMPERATURE: Shows the current temperature value of the ISOCYANATE. The temperature box blinks in light green when the heater is in operation.

SET POINT TEMP: Allows you to modify the temperature of the ISOCYANATE. To do this, click on the yellow box and then modify the value.

ON (OFF) button: Allows you to turn the ISOCYANATE heating on or off.

The background color of the ISOCYANATE indicator box indicates heater operation. If it is GREEN, it means it is heating up. If it's RED, it means it's off.

d -HYDRAULIC PUMP.

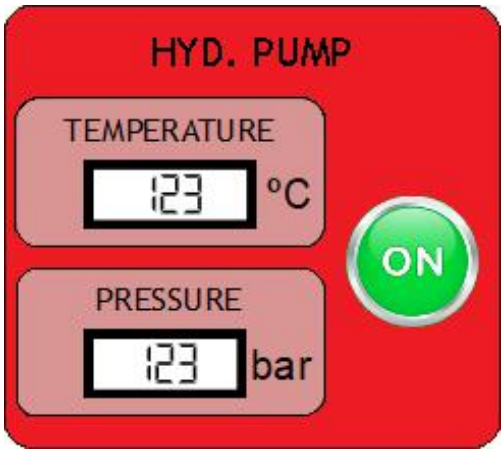

TEMPERATURE: Shows the current temperature value of the HYDRAULIC PUMP.

PRESSURE: Allows you to view the hydraulic oil pressure.

ON (OFF) button: Allows you to turn the HYDRAULIC PUMP on or off.

The background color of the HYDRAULIC PUMP indicator box indicates OPERATION. If it is GREEN, it means it is working. If it is RED, it means that the HYDRAULIC PUMP is off.

e -CYLINDER.

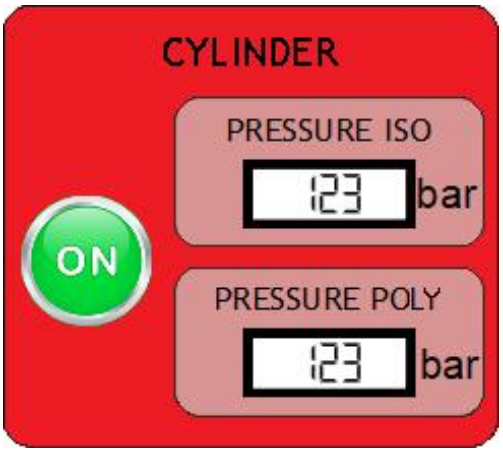

ISO PRESSURE: Allows you to view the ISOCYANATE pressure.

POLY PRESSURE: Allows you to view the POLYOL pressure.

ON (OFF) button: Allows you to turn the Isocyanate and Polyol DOSING PUMP on or off.

The background color of the DOSING PUMP indicator box indicates operation. If it is GREEN, it means it is working. If it is RED, it means that the DOSING PUMP is off.

f -ALARMS.

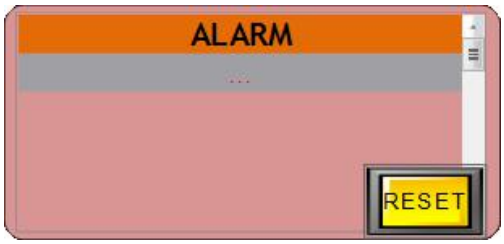

This screen shows all the alarms that occur in the machine.

RESET: Allows you to DELETE all the alarms of the machine. To start the machine, it is necesary to eliminate the reason for the alarm (over-pressure, excessive temperature, emergency stop has been pressed, etc), then press the RESET button to CLEAR the alarms and finally start the machine.

g - Return to the main screen.

Pressing this button takes you back to the main screen.

Automatic operation mode.

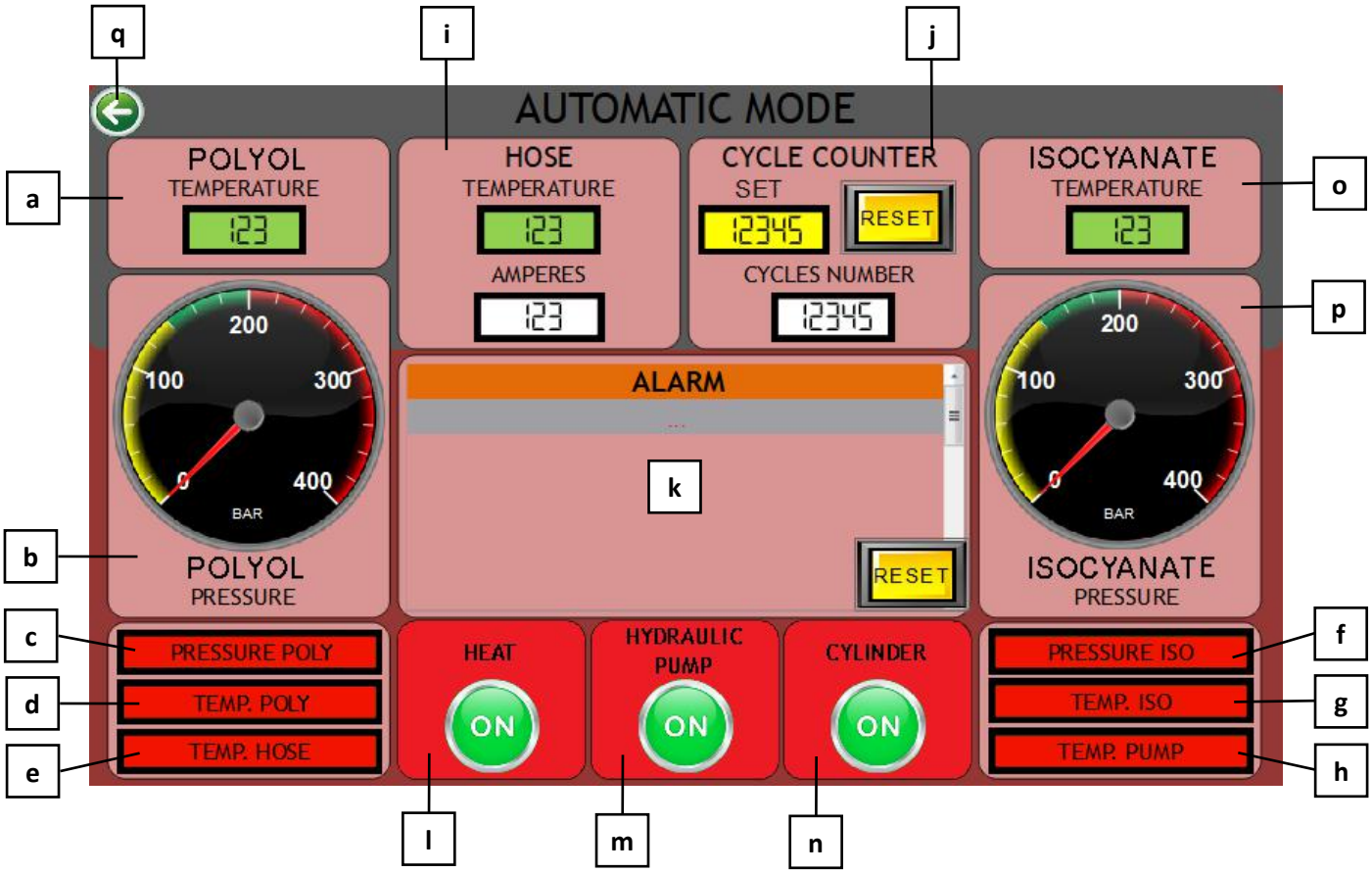

The automatic operation mode only allows the machine to operate when all the pressure and temperature values are within the optimum values. On the operating screen you can also turn on or off the hydraulic pump or the product dossing cylinder. In the alarms section you can display the causes that cause the machine to stop.

The pressure and temperature values are calibrated in CELTIPOL depending on the products dosed by the machine (Polyurea or Polyurethane).

a - POLYOL temperature

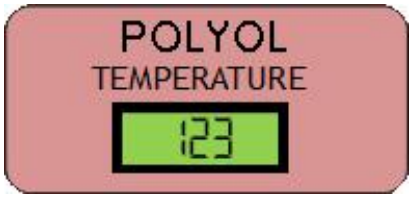

TEMPERATURE: Shows the current temperature value of the POLYOL. The temperature box blinks in light green when the heater is in operation.

The value of the temperature programmed for the POLYOL is calibrated in CELTIPOL depending on the products dosed by the machine (Polyurea or Polyurethane).

b - Pressure of POLIOL

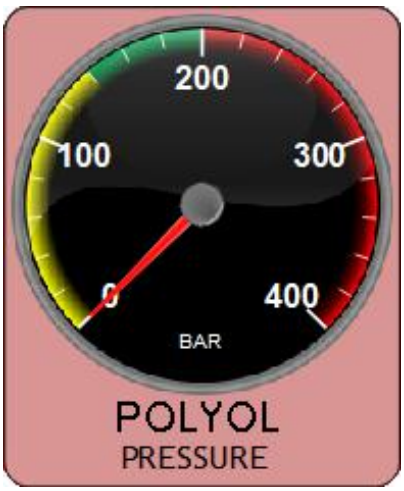

Shows the value of the current PRESSURE of the POLYOL.

The manometer shows in **green** the range of optimal pressures for the job.

The pressure range in **red** is above the maximum value admissible, so the machine will stop and alarm will appear.

The range of pressures in **yellow** is below the optimal value but the machine can continue to work.

The values of minimum recommended pressure and maximum pressure are calibrated in CELTIPOL depending on the products dosed by the machine (Polyurea or Polyurethane).

c - POLYOL pressure indicator light

This warning light iluminates **red** when the pressure is outside the optimum pressure range. The warning light iluminates **green** when the pressure is within the optimum pressure range.

d - POLYOL temperature indicator light

This warning light iluminates **red** when the POLYOL temperature is outside the optimal range. The indicator iluminates green when the temperature is within the optimum range.

In automatic mode the operation of the machine cannot be started until this indicator light is **green**.

e - HOSE temperature indicator light

This warning light iluminates **red** when the HOSE temperature is outside the optimal range. The indicator iluminates green when the temperature is within the optimum range.

In automatic mode the operation of the machine cannot be started until this indicator light is **green**.

f - ISOCYANATE pressure indicator light

This warning light iluminates **red** when the pressure is outside the optimum pressure range. The warning light iluminates **green** when the pressure is within the optimum pressure range.

g - ISOCYANATE temperature indicator light

This warning light iluminates **red** when the ISOCYANATE temperature is outside the optimal range. The indicator iluminates green when the temperature is within the optimum range.

In automatic mode the operation of the machine cannot be started until this indicator light is **green**.

h - PUMP temperatue indicator light

This warning light will iluminate **red** when the temperature of the electric motor of the hydraulic pump is above the safety value. The indicator light iluminates **green** when the temperatue does not exceed the safety value.

In automatic mode the operation of the machine cannot be started until this indicator light is **green**.

i - HOSE temperature indicator

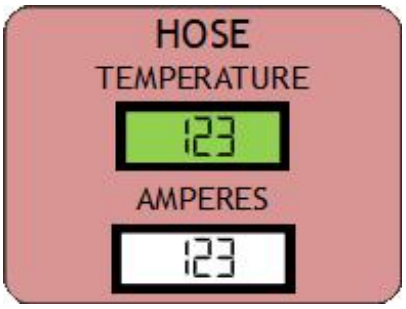

TEMPERATURE: Shows the value of the current temperature of the hose. The temperature box blinks in light green when the hose heating comes on.

AMPS: Shows the current that is in the hose.

The value of the temperature programmed for the HOSE is calibrated in CELTIPOL depending on the products dosed by the machine (Polyurea or Polyurethane).

j - CYCLE COUNTER

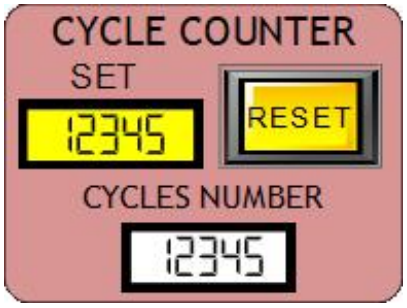

SET: Used to program the number of cycles. To change the value, click on the yellow box and then change the number.

NUMBER OF CYCLES: Shows the number of cycles elapsed since it starts counting. The machine **stops its operation** when it reaches the value programmed in SET.

RESET: By pressing the RESET button the number of cycles is set to 0.

k - ALARMS

This screen shows all the alarms that cause the machine to stop.

RESET: Allows you to DELETE all the alarms of the machine. To restart the machine, it is necessary to remove the reason for the alarm, then press the RESET button to CLEAR the alarms and finally start the machine.

The list of possible alarms is as follows:

ISO high pressure, POLY high pressure

ISO high temperature, POLY high temperature, HOSE high temperature, PUMP high temperature

Emergency stop

Unbalanced pressure (this can happen if one of the products is missing or if there is a jam).

l - HEAT

Pressing this button turns on the heaters of both products and hose.

The background color of the HEAT button box indicates the operation. If it is GREEN, it means that it is working. If it is RED, it means that the heating is disabled.

m - HYDRAULIC PUMP

Pressing this button turns on the HYDRAULIC PUMP of the mechine to provide pressure to the hydraulic group.

The background color of the HYDRAULIC PUMP button box indicates operation. If it is GREEN, it means it is working. If it is RED, it means that the hydraulic pump is off.

n - CYLINDER

Pressing this button starts up the dosing CYLINDER of the machine.

The background color of the CYLINDER button box indicates operation. If it is GREEN, it means that it is running. If it is RED, it means that the dosing cylinder is stopped.

This button is the one that starts the dosing of product under pressure. If the HEAT and HYDRAULIC PUMP are not also lit, the machine will not start.

It is also necessary that the HOSE, ISOCYANATE, POLYOL and PUMP temperature indicator lights are green. Additionally, there cannot be any message on the ALARMS screen.

o - ISOCYANATE temperature

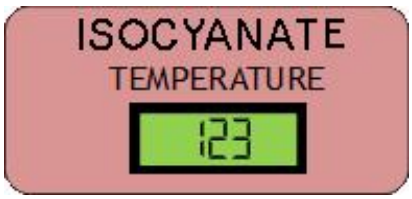

TEMPERATURE: Shows the value of the current temperature of the ISOCYANATE. The temperature box blinks in light green when the heater is in operation

The temperature value programmed for ISOCYANATHE is calibrated in CELTIPOL depending on the products dosed by the machine (Polyurea or Polyurethane).

p - Pressure of ISOCYANATE

Shows the value of the current PRESSURE of the ISOCYANATE.

The manometer shows in **green** the range of optimal pressures for the job.

The pressure range in **red** is above the maximum value admissible, so the machine will stop and alarm will appear.

The range of pressures in **yellow** is below the optimal value but the machine can continue to work.

The values of minimum recommended pressure and maximum pressure are calibrated in CELTIPOL depending on the products dosed by the machine (Polyurea or Polyurethane).

q - Return to the main screen

Pressing this button you go back to the main screen.

Setup.

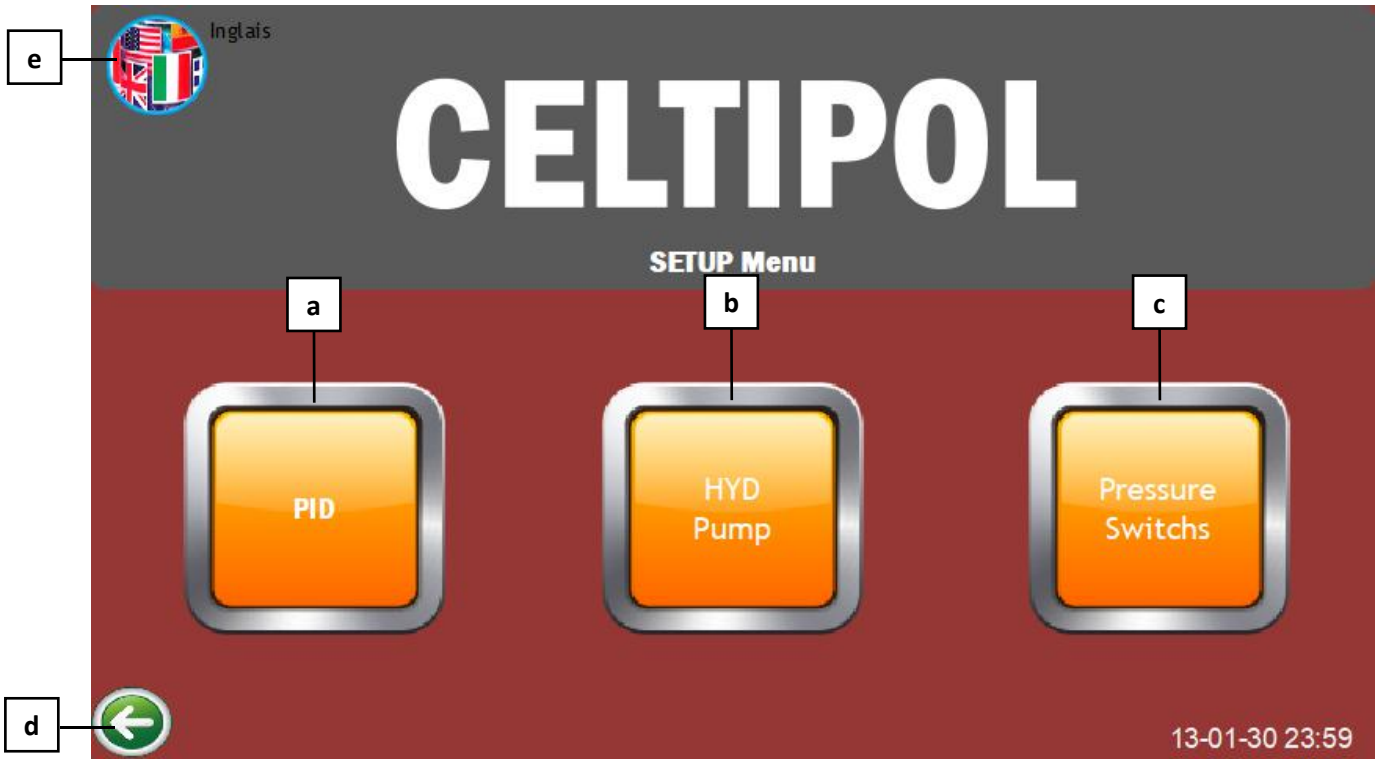

a -**PID**. Pressing on this button accesses the PID setup. It is necessary to enter with a username and a password to be able to acces the PID setup.

b -**Hydraulic pump**. Pressing on this button accesses the setup of the hydraulic pump. You need to enter with a username and password to acces the hydraulic pump setup.

c -**Pressure switchs**. Pressing on this button accesses the setup of the pressure switches. You need to enter with a username and password to access the pressure switch setup.

d - **Return to the main screen menu** (operating mode selection)

e - **Return to the start screen menu** (language selection)

PID

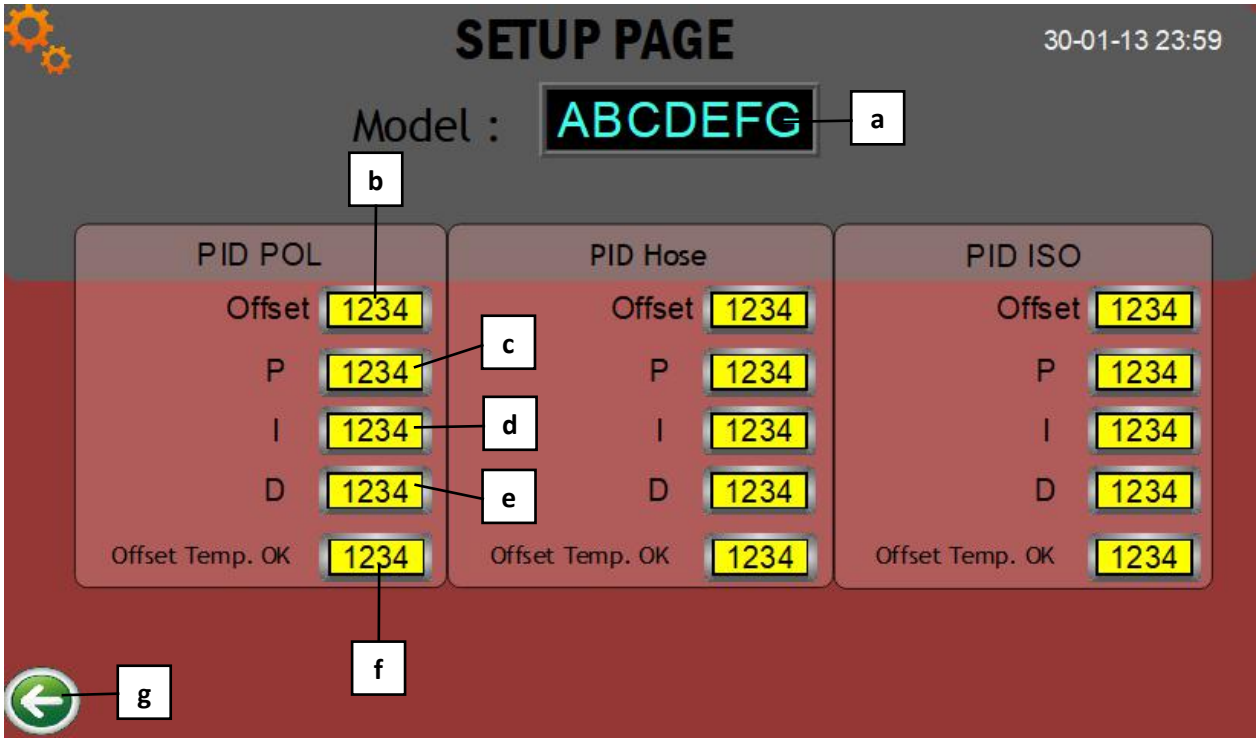

By varying the parameters of the PID controller you can modify the heating response of the machine to minimize temperature oscillation.

The value of the PID controller parameters are calibrated in CELTIPOL depending on the products dosed by the machine (Polyurea or Polyurethane).

a - **Model of the machine**.

b - **Offset parameter**: This value is calibrated in CELTIPOL. It is recommended not to modify.

c - **Parameter P** (proportional part): This value is calibrated in CELTIPOL. It is recommended not to modify.

d - **Parameter I** (integral action): This value is calibrated in CELTIPOL. It is recommended not to modify.

e - **Parameter D** (derivative action): This value is calibrated in CELTIPOL. It is recommended not to modify.

f - **Offset temperature OK**: This value is calibrated in CELTIPOL. It is recommended not to modify.

g - **Return to the SETUP menu.**

Oil pump

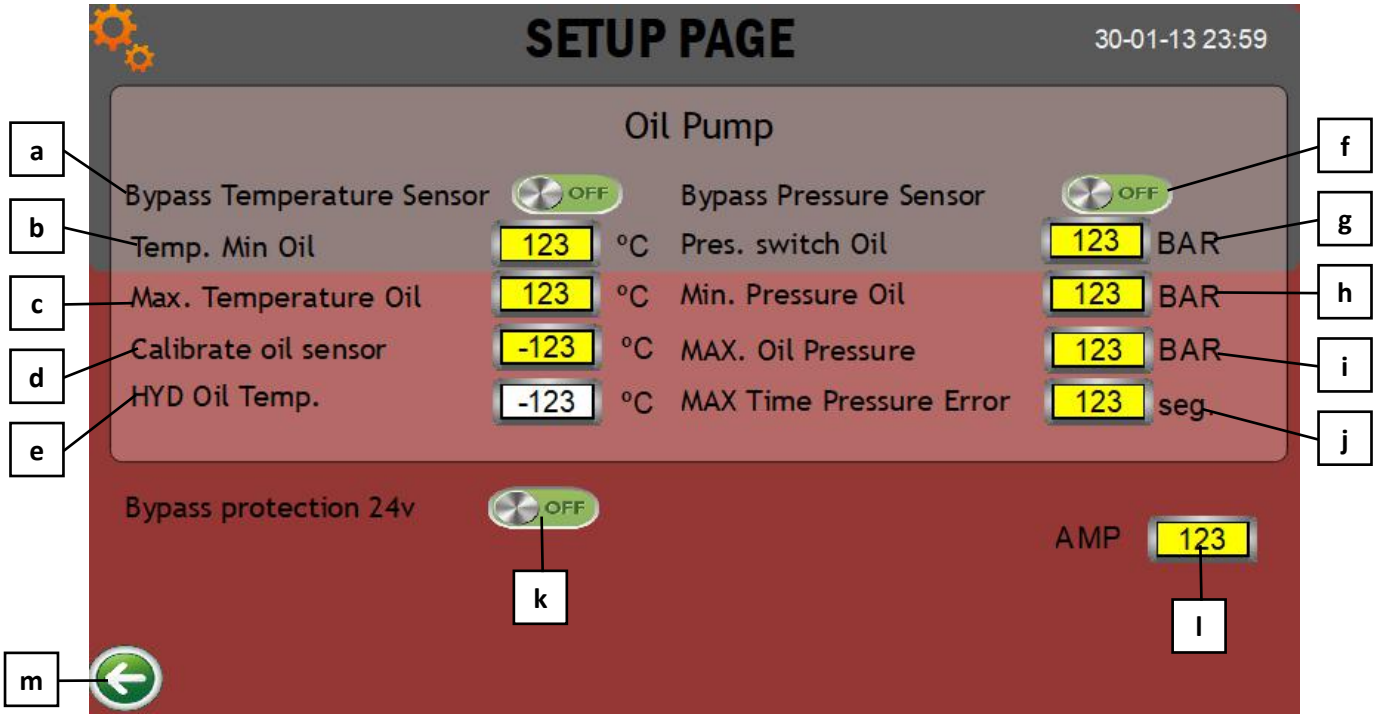

This parameters regulate the operation of the hydraulic system of the machine.

The values of the parameters of the hydraulic system are calibrated in CELTIPOL and its modification is not recommended.

a - **Bypass temperature sensor**: Activates/deactivates the hydraulic oil temperature probe.

Activating the switch 

activates/deactivates the bypass of the hydraulic oil temperature probe. When the switch is in the **OFF** position, hydraulic oil temperature protection is **activated**. When the switch is in the **ON** position, the hydraulic-oil temperatureprotection is **disabled**.

b - **Temp. min. oil**: It is used to modify the minimum value of the hydraulyc oil temperature. If the hydraulic oil temperature drops below this value, the machine stops and an alarm for hydraulic oil temperature is output.

To change the value, click on the yellow box and then change the temperature.

c - **Max. Temperature oil**: It is used to modify the maximum value of the temperature of the hydraulic oil. If the hydraulic oil temperature rises above this value, the machine stops and an alarm for hydraulic oil temperature goes out.

To change the value, click on the yellow box and then change the temperature.

d - **Calibrate oil sensor**: It is used to modify the measured value of the hydraulic oil temperature.

To change the value, click on the yellow box and then change the temperature.

e - **Hyd oil temp.**: Displays the measured value of the hydraulic oil temperature.

f - **Bypass pressure sensor**: Activates/deactivates the hydraulic oil pressure sensor.

Activating the switch 

activates/deactivates the bypass of the hydraulic oil pressure sensor. When the switch is in the **OFF** position, the hydraulic oil pressure protection is **activated**. When the switch in in the **ON** position, the hydraulic oil pressure protection is **deactivated**.

g - **Pres. switch oil**: It is used to modify the maximum value of the hydraulic oil pressure. If the hydraulic oil pressure rises over this value, the machine stops and gives an alarm for hydraulic oil pressure.

To change the value, click on the yellow box and then change the pressure.

h - **Min. Pressure oil**: Used to modify the minimum value of the hydraulic oil pressure. If the hydraulic oil pressure drops below this value for a period greater than the **maximum pressure error time (j)**, the machine stops and goes an alarm for hydraulic oil pressure.

To change the value, click on the yellow box and then change the pressure.

i - **Max. oil pressure**: Used to modify the maximum value of the hydraulic oil pressure. If the hydraulic oil pressure rises above this value for a period longer than the **max. time pressure error (j)**, the machine stops and goes an alarm for hydraulic oil pressure.

To change the value, click on the yellow box and then change the pressure.

j - **Max. time pressure error**. If the hidraulic oil pressure goes out the allowed range of pressures (minimum presure and maximum pressure) during a period longer than the maximum error time pressure, the machine stops and an alarm goes out due to hydraulic oil pressure.

The maximum pressure error time does not affect the value of the oil pressure switch (maximum safety value). Whatever the duration of the overpressure above the maximum safety value, it will cause the machine to stop and an hidraulic oil pressure alarm go out.

To change the value you must click on the yellow box and then change the time.

k - **Bypass protection 24v**: Activates/deactivates source protection 24V power-supply.

Activating the switch 

activates/deactivates the bypass of the protection of the 24V power supply. When the switchis in the OFF position, the motorprotection is activated. When the switch is in the ON position, motor protection is disabled.

l - **AMP**: It is used to modify the amperage value of the electroni current transformer.

To change the value, click on the yellow box and then change the amperage.

m - **Return to the SETUP menu**.

16. MACHINE CONTROLS

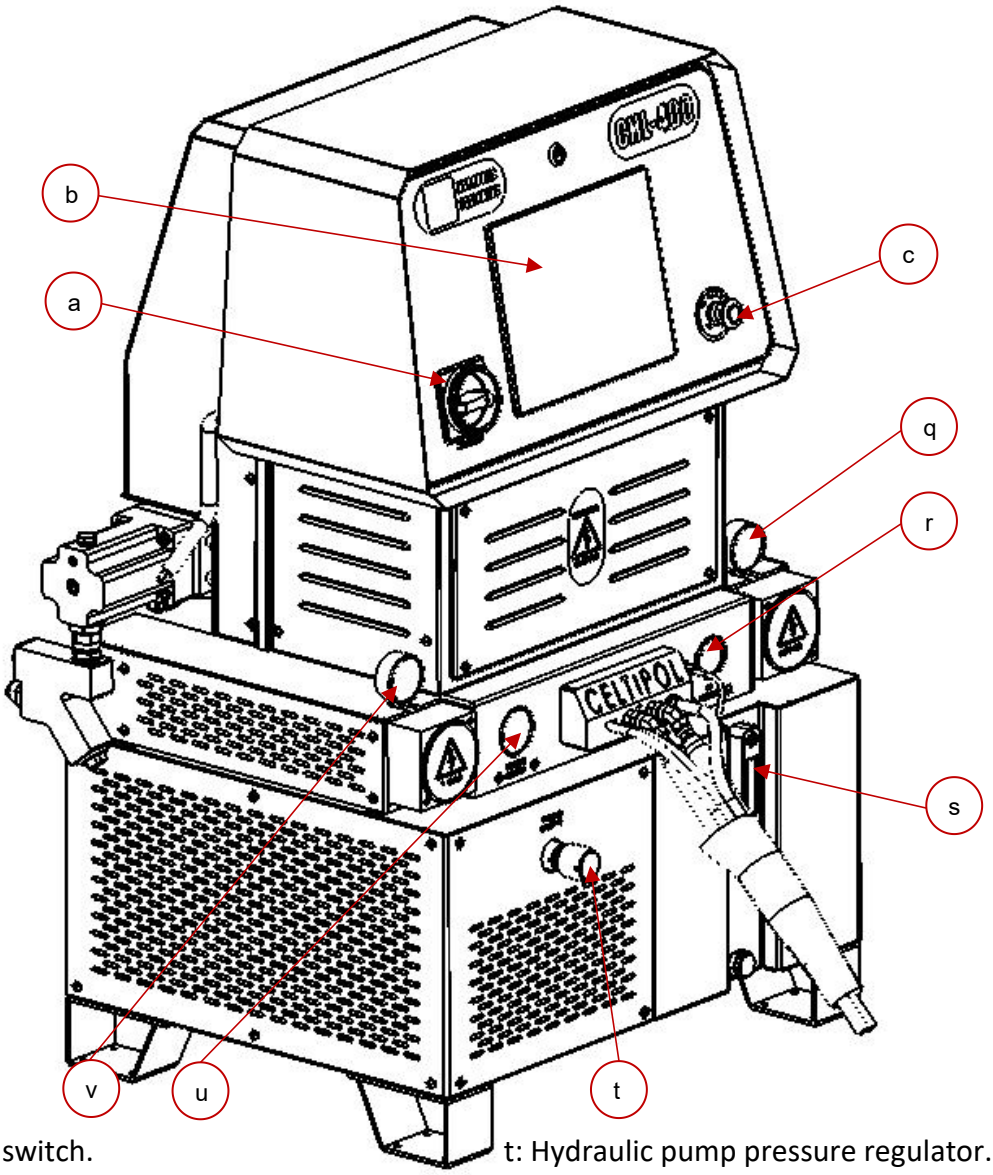

a: General switch.
b: Control panel.
c: Emergency stop.
q: Isocyanate pressure gauge.
r: Air pressure gauge.
s: Hydraulic oil level and thermometer.
t: Hydraulic pump pressure regulator.
u: Hydraulic oil pressure gauge.
v: Polyol pressure gauge.

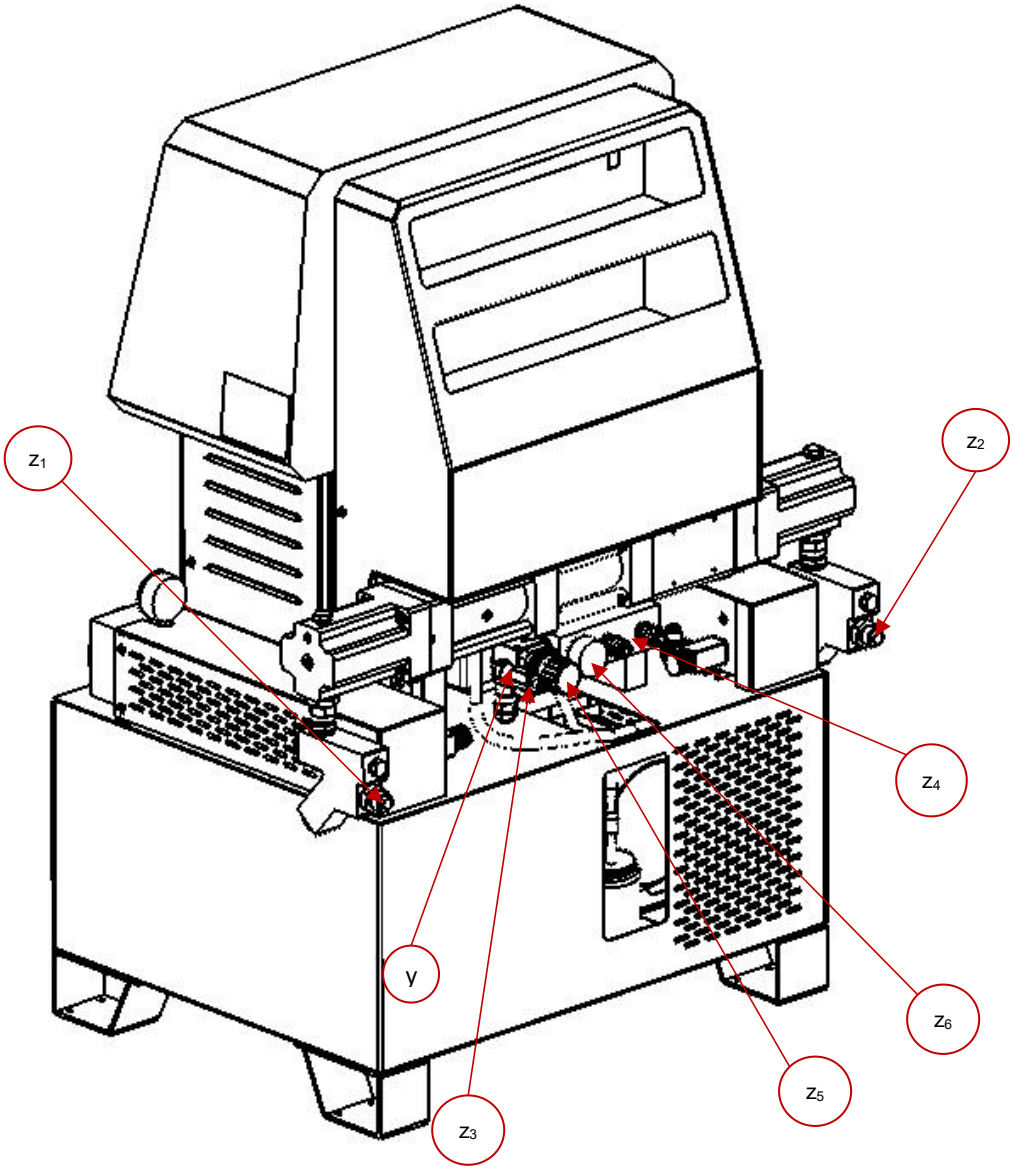

y: Air intake stopcock
z_1: Isocyanate input connection
z_2: Polyol input connection
z_3: Compressed air inlet connection
z_4: Auxiliary compressed air connections
z_5:Compressed air regulator
z_6: Air pressure gauge

17. START-UP SEQUENCE.

1. Install the machine completely fixed and stable.
2. Electrical connection of the unit. Ensure that the electrical connection is correct and that the line is suitably shielded (magnetothermal and differential shielding). Check the correct connection of the phases. If the phases are wrongly connected, the phase sequence monitoring relay (9012) prevents the machine from starting.
3. Connect the machine to earth using the terminal fitted for the purpose (only necessary in the event of the external power supply hose has no earth conductor).
4. Unroll the hoses.
5. Ensure that the emergency pushbutton is not activated (***c***).
6. Connect product tanks to the machine (***z_1,z_2***) by transfer pumps. [1]
7. Connection of compressed air (external supply) to the distributor (***z_3***).
8. Open the main air valve located in the air distributor (***y***).
9. Adjust the air pressure between 6 and 8 bars.
10. Unscrew the loose nut on each stopcock on the gun and insert the end of each hose into their respective tanks (this task of recirculating liquids must be carried out before using the machine for bleeding the air in the same). [2]
11. Put the general switch (**a**) in the ON position.
12. Connect the hydraulic pump by the touchscreen. (***c***).
13. Select the working pressure by means of a pressure regulator (***t***) located on the front of the machine. A pressure (bar) must be selected depending on the product to be used. It is displayed on the pressure gauge (***u***):
    i. Polyurea: 170-200 bar
    ii. Polyurethane: 100-120 bares

    (In the pressure switches of both heaters a protection pressure is preselected, causing the machine to stop if this pressure is reached due to any anomaly).
14. Operate the cylinder start using the touchscreen (**c**) to fill the pumps with liquid.
15. Select the desired temperature in the heaters for each product using the touchscreen (c) and connect the heaters using the touchscreen (**c**).[3-4]
    Select the desired temperature in the hoseusing the touch screen (**c**)[5]. Connect the desired heating via touch screen (**c**).
16. Leave the cylinder activated for a few minutes for effective bleeding.
17. Stop the machine to be able to perform the following procedures.
18. Reconnect both loose nuts on each product to the gun.
19. Open the air stopcock on the gun.
20. Open the valves for both products in the gun.
21. The system is now ready to start the application[7].
22. Use the appropriate means of personal protection[8].

1. Do not start up the system without material in the pumps or tanks.

2. Do not unscrew the loose nut on the gun with the machine in

3. Do not connect the heaters without products.

4. The operational temperature will vary depending on climatic conditions or the reaction of the different brands of the products.

5. Where necessary to alter the length of the hose, it will be necessary to first alter the output voltage of the transformer (Consult the Technical Assistance service).

6. Do not open the taps on the products without first opening the air stopcock (on the gun).

7. Do not place any part of the body in the direction of the projection nor project towards other people.

8. It is advisable to use protective goggles, air mask, protective clothing and other safety equipment. Manufacturers' recommendations and the instructions for the products used should be followed.

18. SELECTING WORK TEMPERATURE.

Through the control screen you can select the temperature of each product and the hose. It is necesary to select the ideal temperature depending on the products to be used and the projection work to be carried out. (The controls screen is delivered programmed and with the temperature pre-selected from the factory based on the customer's needs).

19. SELECTION OF WORK CYCLES.

The control screen allows to count the pumpingcycles and also allows the blocking at the end of the programmed cycles.

20. DAILY STOP SEQUENCE.

1. Close the stopcock taps on both products on the gun.
2. Activate the gun trigger two or three times to clean[9].
3. Deactivate heating in the hose with the toch screen (***c***) [10].
4. Deactivate the heaters using the touch screen (***c***).
5. Deactivate the POLY-ISO pump using the touch screen (***c***).
6. Open the taps for the products to the gun, and pull trigger several times until the pressure of the products on the manometers (***q, v***) drops below 30 bar.
7. Deactivate the hydraulic pump using the touch screen (***c***).
8. Turn off the main switch (***a***).
9. Close the product valves to the gun and activate the trigger 2 oe 3 times.
10. Close the air stopcock to the gun.
11. Remove side covers and front cover from gun for cleaning. Lubricate with Celtipol grease [11].
12. Close the main compressed air valve of the machine (***y***).
13. Disconect the machine from electricity.

9. Observe if there are any losses in the injectors by repeatedly activating the trigger.

10. The hoses with hot products should not be bled under no circumstance.

11. Never dismantle the side blocks on the gun with the product taps open since the gun may fill up with foam and be a risk for the user.

21. EXTENDED STOP SEQUENCE (OVER ONE MONTH).

1. Ensure that the stopcock taps on the products on the gun are fully closed.
2. Connect the transfer pumps to two separate containers, with an approximate amount of 10 liters of solvent in each.
3. Spray material on the side blocks, opening the stopcock taps in the products on the gun. The jet should be aimed at an appropriate container until clean solvent comes out of the side blocks.
4. Connect the transfer pumps to two separate containers, with an approximate amount of 10 liters of D.O.P. plasticizer.
5. Resume spraying until all solvent has been purged from the system and only plasticizer is coming out of the side blocks [12].
6. Apply a thick layer of Celtipol grease to each side of the front housing of the gun.
7. Once again, place the side blocks on the front housing of the gun [13].
8. Remove the adapters from the transfer pumps from the product tanks. Clean the plug adapters with solvent and then cover with Celtipol grease.
9. Clean the large holes in the plug on the material tanks with solvent, cover with Celtipol grease; reinstall the plugs/caps on the drums when received from the material supplier.

12. Do not bleed the D.O.P. plasticizing fluid from the accumulated system.

13. Grease should appear on the tip of the mixing chamber. Excess grease should be spread over the rest of the gun to help to eliminate any excess accumulated spray.

22. SYSTEM MAINTENANCE.

- ✓ Check the condition of the existing DOP plasticizer oil in the lubrification bottle of the Isocyanate pump. Empty every two weeks, clean with ethyl glycol and fill the lubrication bottle with DOP. (The oil should be changed immediately if color changes or signs of solidification are observed)
- ✓ Clean filters on the product input with ethyl-glycol (weekly).
- ✓ Regularly check the emergency button trigger (***c***).
- ✓ Regularly check the safety elements for over-temperature and over-pressure.
- ✓ Regularly check the status of the machine's internal lines, both for air and products.
- ✓ Regularly check the status of the hoses (for abrasions or cuts).
- ✓ Clean and refill the gun with white lithium grease or petroleum jelly (daily).

23. GENERAL BREAKDOWNS.

Another way of avoiding incorrect handling of the equipment and to avoid any possible situation of risk is to know how to detect the source of the more frequent breakdowns, as well

as to know how to solve them. To achieve this, essentially, the operator/user should be acquainted with:

1. The normal working order of the equipment, with its corresponding sequences of start-up and stop.
2. The flow diagram of the materials going through the equipment.
3. The appearance of the product perfectly applied and its possible variables.

Since the ultimate aim of the equipment is the correct application and finish of the foam, it should be the final appearance of this that we should, in the first place, examine to locate any possible breakdown or anomalies in the application process and, in this way, identify the material that is missing (Isocyanate or Poliol).

Therefore, the most appropriate procedure to locate breakdowns is as follows:

1. Identify the product missing.
2. Check the pressure gage corresponding to the material that is missing (***q,v***) in such a manner that if the reading is higher than normal, there is an obstruction problem between the pressure gage and the point in the chamber where the gun makes the mix. Conversely, if the reading is lower than normal, there is an obstruction problem between the pressure gage and the transfer pumps[14].
3. In the event that the hydraulic pressure in the material that is deficient is higher than normal, we should start to check for possible causes for the obstruction from the furthest point away from the unit (gun) and move upstream following this sequence:

   I. Gun: [14]
   - ✓ Ensure that the product tap is fully open.
   - ✓ Check the cleanliness of the front hole on the mixing chamber.
   - ✓ Check for the extent of cleanliness in the filter grille.
   - ✓ Check the cleanliness of the side hole on the mixing chamber.

   II. Hose:
   - ✓ Ensure that the hoses are not blocked.

4. In the event that the hydraulic pressure in the material that is deficient is lower than normal, we should start to check for possible causes for the obstruction in the furthest point away from the machine (product feed) and move downstream, starting with the products tanks:

   - ✓ Check for product in the tanks.

- ✓ Check the temperature of the material, since an excessively cold material, especially in the bottom of the tank, will increase the viscosity of the material and will block the transfer pumps. Conversely, excessive temperature in the material, on the polio side, will cause irregular properties in the material.
- ✓ Check the status of the dosing pumps, paying special attention to determine if the flash appears in the ascending or descending run. If the flash appears on the descending run, check the seating of the lower ball. If the flash appears on the ascending run, check the seating of the upper ball.
- ✓ In any case, repair works should be carried out as soon as possible. The unit should be open and in contact with the air as brief a time as possible in order to avoid other problems such as incoming humidity in the system or crystallization of the isocyanate.

In the event of the unit being exposed to the atmosphere, it will be vital to make it work for enough time to shift the material that there was in the unit when opened[15].

14. We should only concern ourselves with the hydraulic pressure on the side where the material is lacking. Furthermore, we should bear in mind that the pressures recorded on both pressure gages do not necessarily have to coincide due to the different products used, different viscosities, etc.

15. Prior to any kind of handling or repair of the gun, discharge all the pressures in the fluid and air.

24. LOCATING INCIDENTS.

The CHL-400 machine has been designed and built to withstand severe work conditions with a high degree of reliability, on the condition that it is used and maintained in the appropriate manner. See below for information on possible incidents that may cause problems preventing continuing to operate with the Machine. The information provided should be use as a guide to be able to detect and solve most of the problems before resorting to the Celtipol technical assistance service. In any case, feel free to contact the technical assistance service where a team of qualified technicians will attend to you and will assess you wherever you may require.

Repairs conducted by non-qualified personnel or the use of spare parts that are not the originals may be hazardous for the operator.

Possible incidents:

1. Failure of the electrical supply:
   To turn the machine on, the main switch (**a**) must be turned to the ON position, and the control screen (**b**) must be turned on. If the sreen does not light up, it indicates that the electrical current does not exist or is defective.
2. *IIncorrect phase connection:*
   Check the correct phase connection. If the phases are incorrectly connected, the phase sequence monitoring relay (9012) prevents the machine from starting. Connect correctly and restart the machine.

3. Emergency stop is activated *(**c**):*
   With the emergency stop button (***c***) activated, the electrical power in the machine is interrupted, causing a stop during the operation of the machine or making it impossible to start operation.

   To unlock the emergency stop (***c***), you have to pull the emergency stop button in the opposite direction to the control panel, and then eliminate the alarm on the control screen.

4. Short-circuit electrical overload*:*
   The control panel has a magnetothermal switch (ref.9001) which, in the event of an electrical overload or a short circuit, causes the electrical current to cut off, and must be activated manually once the fault has ceased.
   The circuit breaker is inside the electrical cabinet.

It is very important to turn the general switch (a) to the OFF position and / or disconnect the machine from the electric current before handling the elements inside the electrical panel.

5. Unbalanced pressures*:*

Decompensation of pressures occurs when an obstruction in the hose or in the gun prevents one of the components to be freely released through the gun chamber when projected or when a problem in the pumping system prevents one of the components from being able to reach the gun in the required amount.

To determine whether decompensation occurs as a result of an obstruction or as a result of a problem in the pumping system, project with the gun, observe the pressure indicated on the pressure on the pressure gage (***q,v***) in the other component: if the pressure of the missing component is higher, decompensation is the result of an obstruction. If the pressure is lower, decompensation is the result of a problem in the pumping system.

6. Cavitation*:*

Cavitation occurs when the pumping system requires a greater volume of material than that supplied by the feeding system, leading to the formation of a vacuum in the dosing pump. The causes that can cause cavitation are as follows:

a. The transfer pump fails to supply the required volume. The problem may be that the pump does not meet the required characteristics, the lack of air supply to the pump or that the pump is faulty. A 2:1 ratio pump is recommended for isocyanate transfer and a supply hose with a minimum internal diameter of 20mm.
b. High viscosity. Polyurethane foaming systems normally require a minimum transfer temperature of 12ºC. With lower temperatures, the product increases its viscosity making pumping difficult. When environmental conditions do not allow the products to be kept at a minimum temperature of 12ºC, auxiliary heating elements must be used to adapt the products to the minimum temperature required for transfer.
c. The product inlet filter is obstructed (ref.2100).
d. There has been wear and tear on the gaskets or pump seals preventing the supply of the required product.

7. Failure in the ends of stroke in change of direction*.*

The dosing pump system has two limit switchs ref.(5292) to change the direction of the pumping unit.

If one of them fails, the pump unit will lock in position near where the end of stroke has failed.

Check:

a. that there are no foreign bodies inside the transparent housing that prevent the contact of the bushing (ref.3557) with the limit switches.
b. Manually activate the solenoid valve (ref.7039) to rule out any failure in the same.
c. Electrical current in the ends of run.

8. Safety pressure switches*:*

The hydraulic circuit of each product has a factory set safety pressure switch (ref.7046) at a pressure limit depending on the size of the pumps installed in the machine.

When the limit pressure is reached, the machine stops running and the control screen shows an alarm. The fault can also be seen in the corresponding product gauge.

Until the pressure drops below the set limit, it will not be possible to restart the operation of the machine. To do this, press RESET on the control sreen, and then start the machine again.

9. Temperature controllers

The machine has a temperature probe installed in each of the heaters (ref.3056) and a temperature probe in the hose (ref.7223), witch through their respective controls on the control screen, allow the adjustment of the temperatures as needed.

Each one of the temperature controls has a programmed safety temperature, witch when exceeded stops the operation of the machine. In addition, an alarm is created on the control screen indicating where the excessive temperature is.

Until the temperature drops below the programmed limit, it wil not be possible to restart the operation of the machine. To do this, press RESET on the control screen, and then start the machine again.

25. FAULT DETECTION IN THE APPLICATION:

The simplest way to objectively detect if there are faults in the application is to observe the spraying, which is affected by the following parameters:

- Temperature: A material that is too hot will produce separation in the fan. A material that is too cold will produce a ripple effect.
- Pressure: Too high a pressure will result in excessive or disaggregated spraying. A pressure that is too low will produce a ripple effect.
- Contamination of the products in the mixing chamber.
- A foreign object in the mixing chamber will cause bad fanning.

26. LIST OF COMPONENTS.

2020 Swift connector air gun.....p.31
2061 M6 Grease nipple..... p.20
2062 Grease nipple cover.....p.20
2100 Liquid filter set.....p.9, 16, 24
2102 Watertight washer 1”.....p.17
2103 O-ring Øint30 x 2..... p.24
2104 Filter body.....p.24
2105 Filter holder..... p.24
2106 Filter.....p.24
2107 Safety ring Ø20 x 1.2..... p.24
2108 Watertight washer 3/4”.....p.24
2109 M-M 3/4”G - 1 1/16”SAE joint.....p.24
2111 Plug 3/8”.....p.24
2112 Watertight washer 3/8”.....p.17, 24
2113 M-Htl 3/4”Gas joint.....p.24
2114 Watertight washer 1/2”.....p.27
2208 SPARE KIT filter unit..... p.24
2213 SPARE KIT Piston seal.....p.23
2332 Air distributor set..... p.11, 25
2421 O-ring Øint14 x 3..... p.18
2701 ISO line.....p.29
2702 POLY line.....p.29
2703 ISO hose..... p.31
2704 POLY hose..... p.31
2707 Hose wire.....p.29, 31
2708 Hose air conduit (tube Ø6).....p.29, 31
2750 Anterior connecting block.....p.29
2751 Insulator separator.....p.30
2752 End connecting block..... p.31
2758 Thermostat..... p.26
2850 Sphere Ø18..... p.17
2910 Poly heater inlet hydraulic pipe.....p28
2911 Poly heater outlet hydraulic pipe..... p.28
2912 Iso heater inlet hydraulic pipe.....p.28
2913 Iso heater outlet hydraulic pipe..... p.28
2915 Air pressure gauge hose.....p.28
2916 ISO gun line (hydraulic).....p.31
2917 POLY gun line (hydraulic).....p.31
3002 Manhole cover..... p.14
3004 ISO hose fitting..... p.30
3005 POLY hose fitting..... p.30
3007 Electrical connectors..... p.29
3017 Polyol heater cover..... p.9
3018 Isocyanate heater cover.....p.9, 26
3053 Ø14 Spring for resistance.....p.26
3056 Thermocouple probe.....p.26
3057 Probe fitting.....p.26
3076 Tapón 3/4” NPT..... p.26
3081 Ø14x485 1800W resistance..... p.26
3100-C Armaflex thermal coating.....p.31
3500 Bicolor anti-abrasion covering.....p.31
3503 Motor ventilation grill.....p.9
3530 Front housing.....p.9
3531 Isocyanate heater protection..... p.12
3532 Polyol heater protection.....p.13
3533 Transformer housing.....p.9
3534 Back cover.....p.11, 12
3535 Control cabinet.....p.12
3536 Control cabinet cover.....p.9
3538 Transformer cover.....p.9
3539 Hex. pillar for protection.....p.20, 21
3540 Piston..... p.23
3541-C Piston rod (isocyanate side)..... p.23
3541-D Piston rod (poliol side)..... p.23
3542-A Bronze guide bushing..... p.20, 21
3545 Cylinder body.....p.19
3553 Inlet ball seat.....p.17
3554 Ball stopper.....p.17
3555 Lubrication cylinder.....p.21
3556 Hexagonal pillar.....p.20, 21
3561 M12 tie rod..... p.19
3565 Anti-turn guide..... p.20
3567 Plug 3/8” w. spring housing.....p.17
3568 Spring.....p.17
3570 Solenoid valve base plate..... p.18
3571 Hose outlet unit.....p.9
3572 Input non-return valve.....p.15
3573 Output non-return valve.....p.15, 28
3574 3/8” NPT joint – Ø12 tube connector.....p.26
3575 Reduction M-M 3/4”G–3/8”G.....p. 28
3576 Tee F-M-M 3/8”G..... p.28
3578 Elbow M 3/8”NPT – pipe Ø12..... p.17
3579 Air distributor.....p.25
3580 Isocyanate heater.....p.26
3581 Polyol heater..... p.26
3582 Cylinder head (Isocyanate side).....p.21
3583 Cylinder head (Polyol side)..... p.20
3584-A Piston rod union lubrication side.....p.22
3585-A Piston rod union end of stroke side....p.22
3588 Pin Ø10x34.....p.22
3589 Piston union head..... p.22, 23
3590 Elastic ring for fastening the pin.....p.22
3591 Bost pump sleeve 3/8”.....p.28
3592 Return tank sleeve 1/2”.....p.28
3593 Hidraulic pr. gage sleeve 1/4”.....p.27, 28
3595 Recirculation sleeve 3/8”.....p.27
3597 Suction pump set1”.....p.27
3598 Ball valve 1”..... p.27
3599 Spare KIT polyol gaskets..... p.16
3600 Spare KIT isocyanate gaskets.....p.16
3603 O-ring Øint19x2..... p.23
3604 Motor-pump adapter..... p.28
3946-A Piston rod.....p.22
3947 Guide and Buffer seal housing.....p.22
3948 Piston Head Cap..... p.22
3949 Piston Head.....p.22

3950 Pump head....p.17
3951-A Base (Iso side).... p.21
3951-B Base (Polyol side)....p.20
3952 Closing ring.... p.20, 21
4762 Allen screw M6 x 60.... p.26
4763 Inner Allen screw M6.... p.31
5065 O-ring Øint40 x 2.... p.20, 21
5243 Plug 1/4" NPT.... p.15, 17, 21, 26
5280 Plug 1/2" NPT.... p.17
5281 Pin Ø5....p.17
5284 Lubrication Liquid Bottle.....p.11, 13, 14, 15
5286 Allen screw M8 x 40.... p.18
5287 Allen screw M6 x 35.... p.18
5288 O-ring Øint55 x 4.... p.19
5290 Wiper seal 28-38-5-8.... p.20, 21
5292 Limit switch XCMN21F2L1.... p.18
5293 O-ring Øint60 x 2,5.... p.21
5297 O-ring Øint52 x 3.... p.17
5298 Nylon-bronze bushing Ø 28x15.....p.20, 21
5299 Piston guide Ø 39.6x10.... p.22
5301 Buffer seal VARISEL Ø39.6.... p.22
5303 Security ring Øext53x2....p.20, 21
5304 Pump protection.... p.20
5305 Control screen.... p.10
5613 Allen screw M12 x 100.... p.17
5708 Sphere Ø14.... p.17
5850 Oil tank breather....p.28
5851 Vent plug.... p.28
6040 Identification plate....p.12
7001 M-M 3/8"NPT-3/8"G joint.... p.18
7003 Female quick connector 3/8"....p.25
7004 M 1/4'' NPT-M 1/2'' SAE joint.... p.29, 31
7005 M-M 1/4"NPT-9/16"SAE joint.... p.29, 31
7006 Connector 5/16 hose - 1/2 .... p 30, 31
7007 Connector 5/16 hose - 9/16 .... p 30, 31
7008 M-M 1/4"NPT-3/8"G joint.... p.29
7009 Probe connector unit.... p.29
7010 Swift air connector male....p.29
7032 Air regulator 1/2" MC202-R00....p.25
7033 Valve 1/2"....p.25
7034 Espike 1/2".... p.25
7035 M-M 1/2"G joint....p.18, 25
7036 Air manometer Ø51.... p.25
7039 Solenoid valve.... p.13, 18
7042 Hose transformer 6000VA.... p.33
7043 Air pressure gauge Ø52....p.9
7044 Hydraulic high pr. gage Ø62....p.9
7045 Products high pr. gage Ø62....p.9, 26
7046 Presostat....p.26
7049 Thermometer and hydraulic level.... p.9
7055 Main switch 3x63A....p.10
7056 Emergency stop....p.10
7059 Electric cabinet lock....p.10
7064 Electric motor 7,5 Kw....p.13, 28
7069 Elbow 90º M-F 1/2" NPT....p.25
7087 M-M 1/2"G-3/8"G reduction....p.28
7092 Oil filler cap....p.14
7120 Male air connector....p.30
7121 Female air connector.... p.30
7133 Connector 1/4 hose - 1/2 .... p 31
7134 Connector 1/4 hose - 9/16.... p 31
7140 Pump PHP 1 20-25-35 FHRM.....p.13, 27
7170 Quick conector G3/8" - Ø12....p.25
7208 Two-contact Relays.... p.32
7210 Thermal Relay....p.32
7211 Control transformer.... p.33
7213 Earth terminal....p.32
7215 Heater connection terminals....p.32
7221 Solid state relays.... p.32
7223 Temperature probe....p.29
7228 Pump regulation....p.9, 27
7701 Rod seal 28x36x5.8....p.20, 21
7709 Buffer seal VARISEL Ø28.... p.20, 21
7713 Polyurethane wiper seal Ø28.... p.20,21
8110 Machine connection stretch.... p.9, 29
8200 Pumping unit.... p.9, 16
9001 General magnetothermal 3x63A.... p.32
9002 Contactor 25A....p.32
9003 Contactor 38A....p.32
9010 Fuses 25A....p.32
9011 Glass fuses 2A....p.32
9012 Three Phase monitoring relay....p.32
9013 Four contact relay.... p.32
9017 Power supply with display....p.32
9018 Electronic transformer for PLC....p.33
9019 Solid state relay 8A.... p.32
9021 PLC....p.32
9022 PLC temperature module....p.32
9023 PLC module....p.32
9024 Power supply 220/24V (solenoid valve).p.32
9100 Polyamide tube 8x1....p.15
9101 Polyamide tuve 12x1,5....p.15
9110 Black heat shrink tubing....p 12
9117 Red heat shrink tubing (ISO).... p 29
9118 Blue heat shrink tubing (POLY).... p 29
9119 Red heat shrink tubing (ISO).... p 31
9120 Blue heat shrink tubing (POLY).... p 31

27. TRANSFER PUMPS C-M 16

Technical characteristics of the equipment

- Air pressure:..... 7kg/cm²
- Air consumption:.....200l/min.
- Maximum product outlet pressure:.....20kg/cm²
- Pressure ratio:.....2,8 : 1
- Outflow:..... 30l/min.

Safety in the use of the equipment

- It is advisable for personnel with a history of respiratory complaints to avoid exposure to all isocyanates.
- Chemical products must be handled safely in accordance with manufacturer's recommendations. The manufacturer should provide information on the toxicity of the products used as well as actions to take in the event of accident (wounds, irritation, etc.).
- Products such as polyisocianates, organic solvents and diamines should be stored in a place exclusively for and adapted to such a purpose, with restricted access. Maximum temperatures must be strictly adhered to, both in the application and in storage of chemical products, at all times following the manufacturer's recommendations.
- Also, chemical products are to be stored at all times in suitable containers, following the manufacturer’s recommendations.
- Containers must not be opened until immediately before being used in order to avoid contamination by damp. Any leftover product after being applied should be put back into the original container and be stored in a dry, ventilated place.
- During cleaning tasks of spilt components, it will be essential to use eye protection, gloves and wearing breathing apparatus. Spilt isocyanate can be collected with any absorbent inert product, such as sawdust. In any case, it is important to avoid skin contact. The absorbent product is to be immediately collected and dumped into an open container through the upper part.
- Throughout the entire operation explained above, the area must be correctly ventilated.

Safety personnel equipment:

Celtipol recommends the following personnel safety equipment:

» Protective mask for airways.
» Goggles to protect the eyes.
» Headset to protect against noise.
» Gloves to protect hands.
» Protective clothing for the body.

Puesta en marcha

- Introducir la bomba por la boca del bidón.
- Enroscar la pieza de sujeción al bidón (5074) y apretar la unión de estanqueidad (se recomienda aplicar grasa tanto en las roscas como en la junta).
- Abrir el tapón de respiro del bidón.
- Conectar la manguera de salida del producto (2918) por ambos extremos.
- Conectar la manguera de entrada de aire a la bomba (2919) al kit regulador de presión 5077.
- Conectar la manguera de entrada de aire (2919) a la toma de aire*. La bomba empezará a trabajar al abrir la llave de paso (1202).
- Girar el regulador (7093) hasta que el manómetro (1201) alcance un máximo de 7 bar.
- *Para aumentar la durabilidad del equipo se recomienda el tratamiento del aire mediante secadores y la lubrificación del mismo.

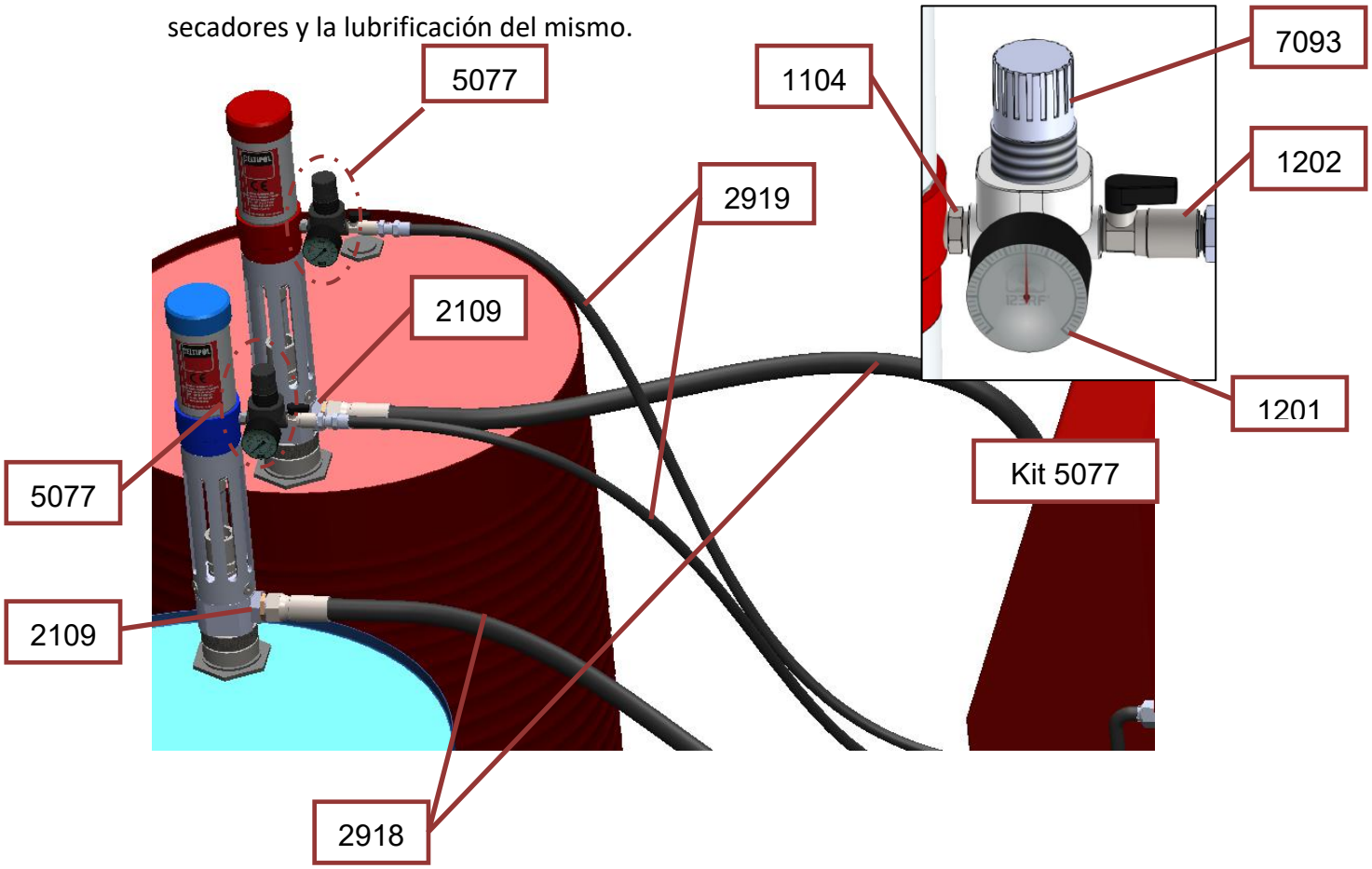

Kit 5006:

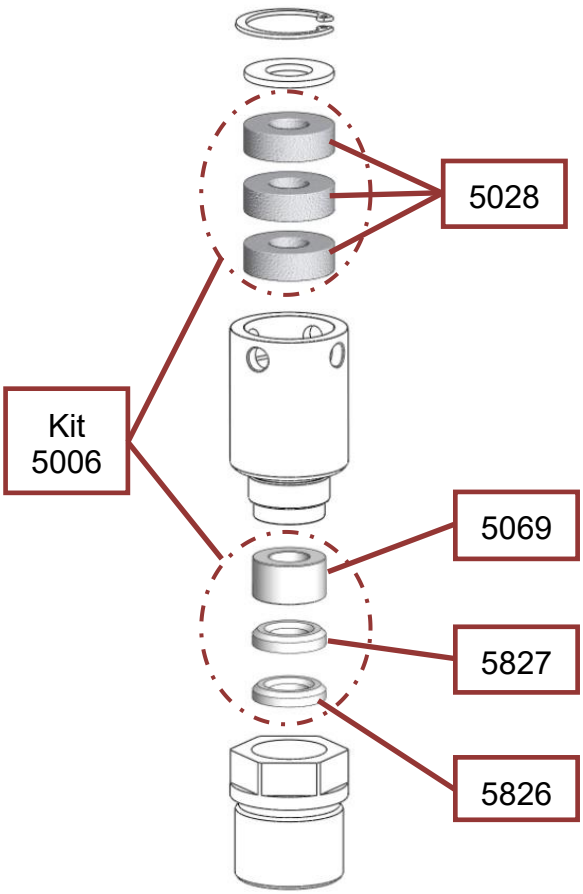

Kit 5072:

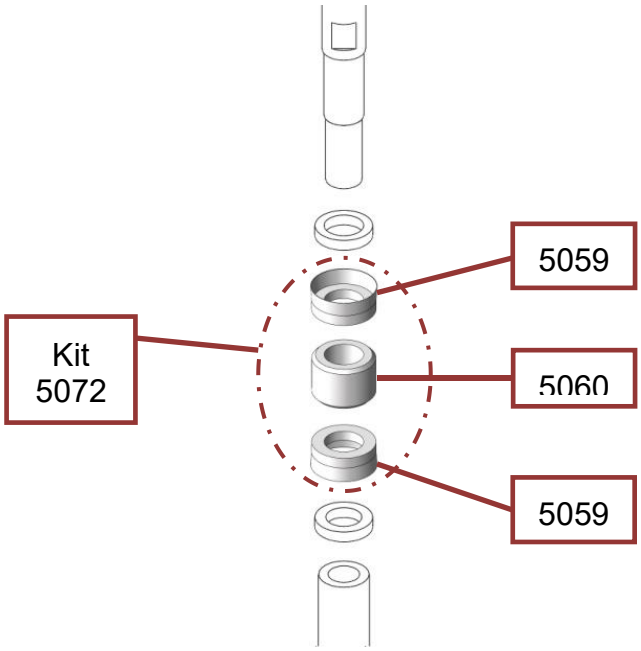

Kit 5071:

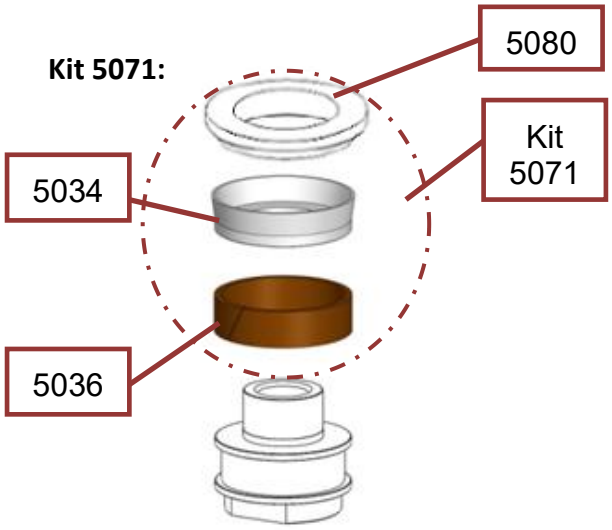

Kit 5075:

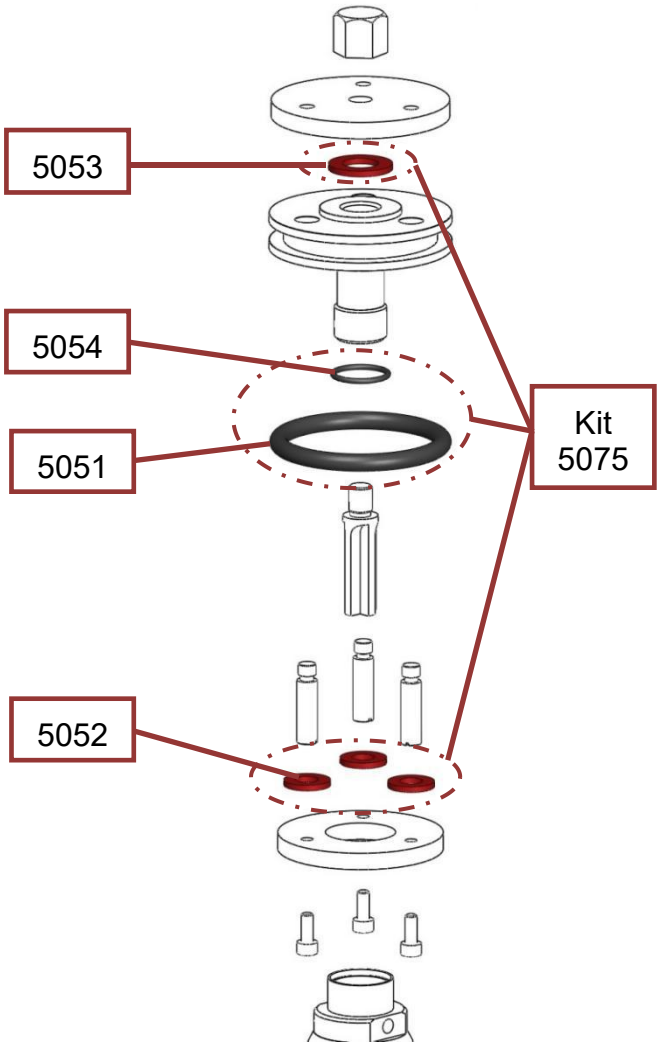

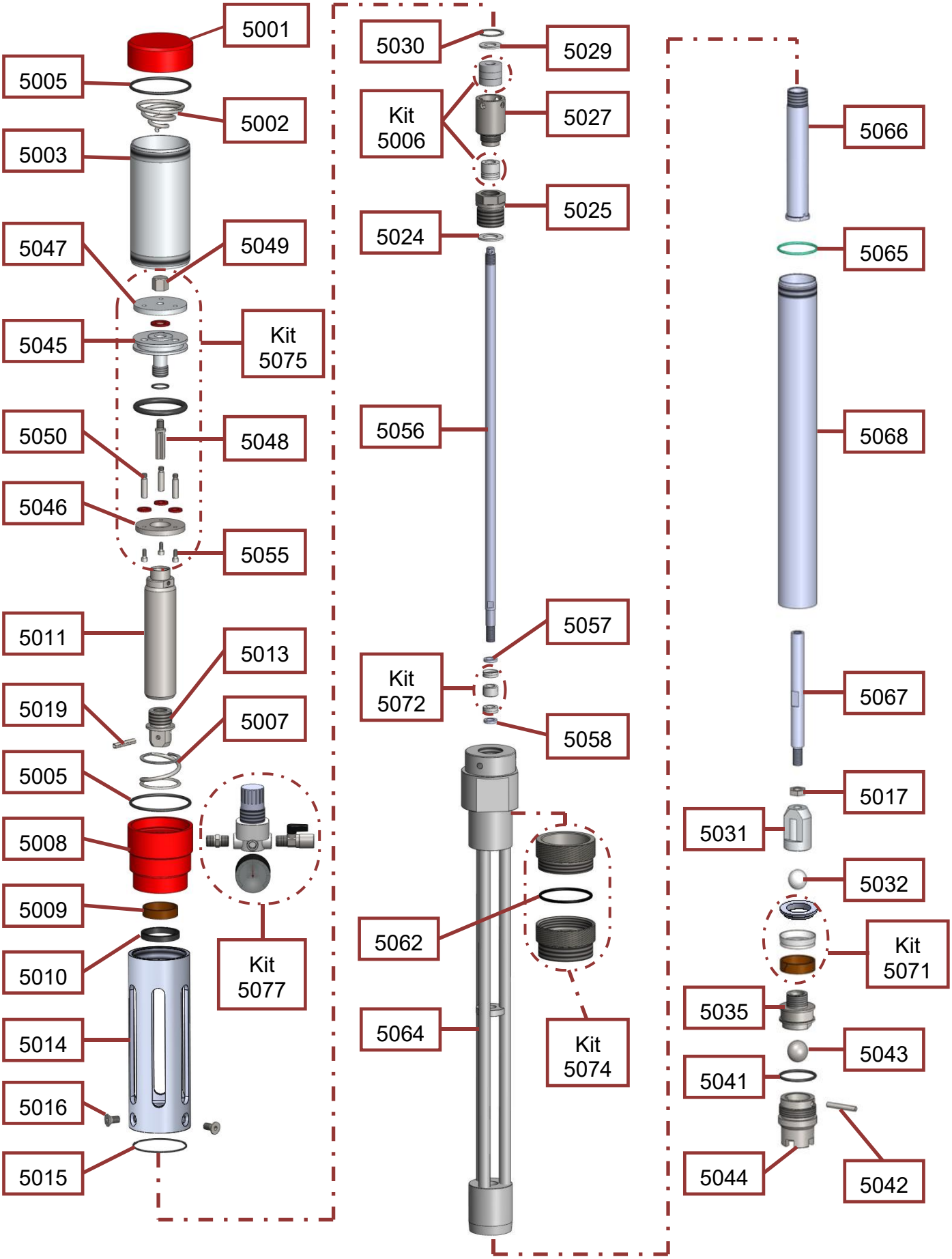
5001
5005
5002
5003
5047
5049
5045
Kit 5075
5050
5048
5046
5055
5011
5013
5019
5007
5005
5008
5009
5010
Kit 5077
5014
5016
5015
5030
5029
Kit 5006
5027
5025
5024
5056
5057
Kit 5072
5058
5062
5064
Kit 5074
5066
5065
5068
5067
5017
5031
5032
Kit 5071
5035
5043
5041
5044
5042

Transfer pump part list C-M 16

REF	DESCRIPTION	QT
2109	Joint M 3/4” – M 1 1/16” SAE	2
2918	Product outlet hose	1
2919	Air inlet hose	1
5001	Cilinder head cover	1
5002	Upper spring	1
5003	Liner	1
5005	O-ring Øint 65x3	2
5007	Lower spring	1
5008	Cylinder head base	1
5009	Rod guide	1
5010	Seal	1
5011	Piston rod	1
5013	Rod cane joint	1
5014	Main pump union	1
5015	O-ring Øint 60x1,75	1
5016	Screw M8	3
5017	Nut M10	1
5019	Pin	1
5024	Nylon closure ring	1
5025	Packing housing	1
5027	Felt housing	1
5029	Felt stop ring	1
5030	Pin	1
5031	Sphere holder	1
5032	Sphere Ø20	1
5035	Lower piston	1
5041	O-ring Øint 36x2,5	1
5042	Sphere holder	1
5043	Sphere Ø22	1
5044	Lower sphere holder	1
5045	Upper piston	1
5046	Lower piston plate	1
5047	Upper piston plate	1
5048	Stem	1
5049	Piston nut	1
5050	Piston stay bolt	3
5055	Screw M4	3
5056	Upper stem	1
5057	Top stop ring	1
5058	Lower stop ring	1
5064	Fluid separator	1
5065	O-ring Øint 40x2	1
5066	Internal cane	1
5067	Lower stem	1
5068	Suction rod	1
5080	Piston ring	1

Kit.5006 Gaskets and felts

REF	DESCRIPTION	QT
5028	Felts	3
5826	Packing base	1
5827	Central packing	1
5069	Packing guide	1

Kit.5071 Lower piston

REF	DESCRIPTION	QT
5034	Piston board	1
5036	Piston guide	1
5080	Piston ring	1

Kit.5072 Internal gaskets

REF	DESCRIPTION	QT
5059	Gasket ring kit	2
5060	Guide kit	1

Kit.5074 Drum holder

REF	DESCRIPTION	QT
5061	Waterpr. pump support	1
5062	O-ring Øin. 53x3	1
5063	Drum connection	1

Kit.5075 Upper piston

REF	DESCRIPTION	QT
5051	Piston O-ring Øin 50x6	1
5052	Bottom plate gasket	3
5053	Upper plate gasket	1
5054	O-ring Øin. 16x2	1

Kit.5076 O-rings

REF	DESCRIPTION	QT
5005	O-ring Øint 65x3	2
5015	O-ring Øint 60x1,75	1
5041	O-ring Øint 36x2,5	1
5065	O-ring Øint 40x2	1

Kit.5077 Pressure regulator

REF	DESCRIPTION	QT
1104	Connector 1/4’’NPT Male	1
7093	Pressure regulator 10bar	1
1201	Manometer Ø42	1
1202	Stopcock 1/4’’ 20bar	1

28. RECIRCULATION KITS.

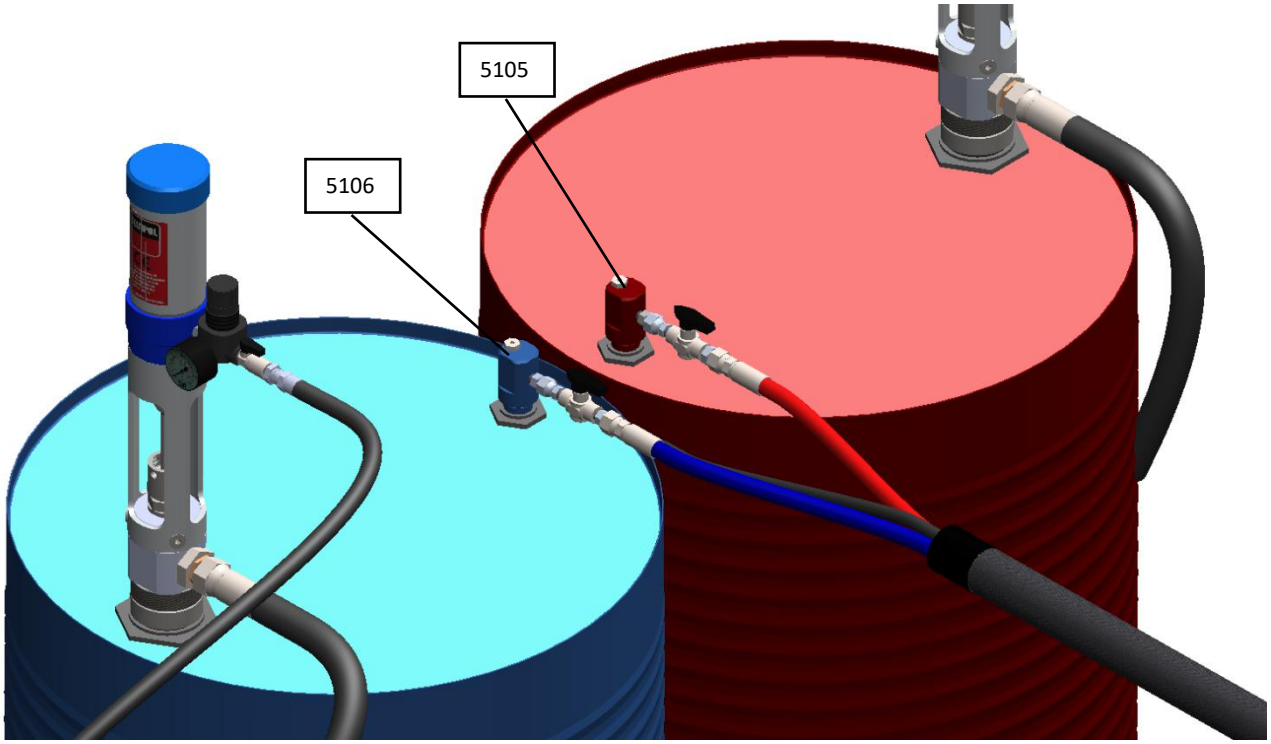

REF	DESCRIPTION
5105	Recirculation ISO KIT
5106	Recirculation POLI KIT

Eventually, the products from the machine must be recirculated. With the recirculation of the products it is possible to raise their temperature before their application and the air and moisture is purged, this being specially important when the weather is cold.

When heating the products, their viscosity decreases and the pressure of each product tends to vary. After a few minutes of recirculation, the temperatures of the products (in hose and heaters) stabilize at the set value, and the pressures of the Isocyanate and the Polyol are equalized in most occasions.

Periodically, the recirculation of the products must also be carried out as a maintenence task, to avoid the crystallization of the Isocyanate in the hoses and ducts. This is especially important when the machine is left idle for long periods. To avoid problems, it is advisable to recirculate the machine every 8days during periods of 10/20 minutes.

To recirculate the machine, proceed as follows:

- Introduce each transfer pump in its corresponding drum.
- Insert the recirculation rods in the breather caps of the Isocyanate and Polyol drums. Care must be taken not to insert the Isocyanate rod into the Polyol drum, or the Polyol rod into the Isocyanate drum.
  Red = Isocyanate; Blue= Polyol
- Unscrew the Polyol and Isocyanate nuts from the spray gun, taking care not to open the ball valves if there is pressure.
- Screw each hose nut onto its respective recirculation rod. The connections are of different sizes to prevent the connection of the Isocyanate hose in the Polyol and vice versa.
- Start the machine.
- Open the valves.
- Recirculate the necessary time.

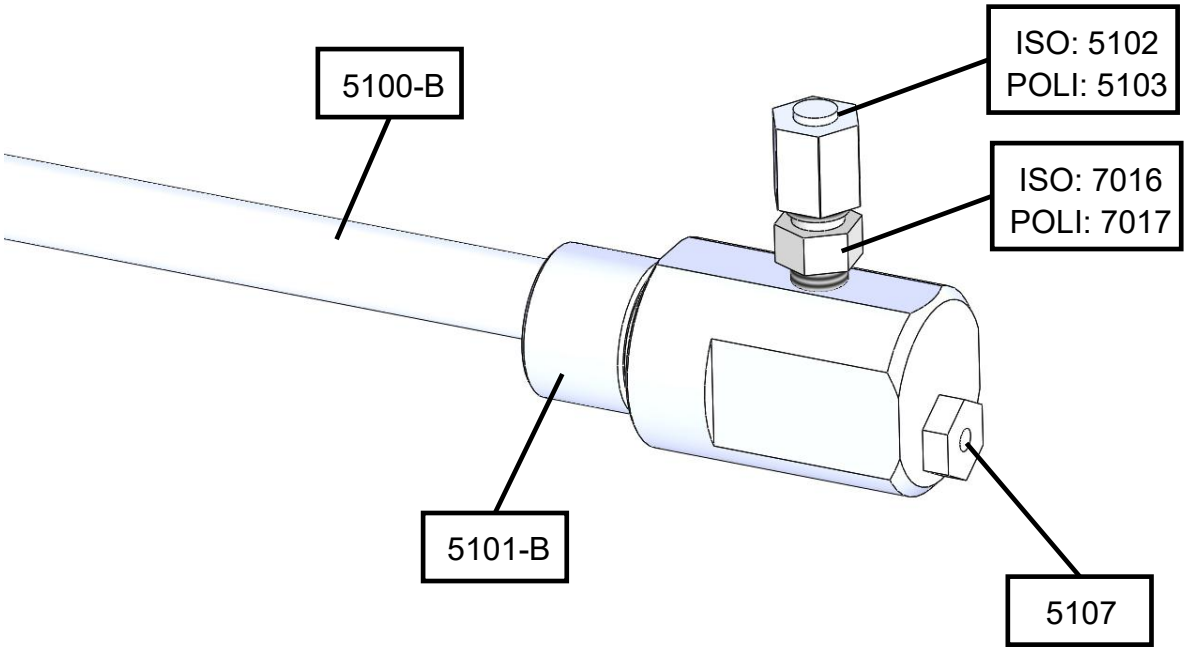

Spare parts			
REF	ISO	REF	POLI
5100-B	Suction tube	5100-B	Suction tube
5101-B	Recirculation body	5101-B	Recirculation body
5107	Aeration valve	5107	Aeration valve
7016	Union 1/8”NPT-7/16”SAE	7017	Union 1/8”NPT-1/2”SAE
5102	Plug female 7/16”SAE	5103	Plug female 1/2””SAE

29. COMMERCIAL GUARANTEE.

Dear customer,

We thank you for your deference in purchasing this CELTIPOL product and hope you are satisfied with your purchase. In the event that this CELTIPOL product requires any service during the guarantee period, our technical service will assist you at the following address:

Faustino Santalices, Nº 35 - Bande - (Ourense) España
Telf.: 988 443 105 - Fax: 988 444 410
E-mail: info@celtipol.com

YOUR GUARANTEE:

Through this consumer guarantee, CELTIPOL warrants the product against faults in material and workmanship for a period of 2 years from the original date of purchase.

If during this guarantee period the product has faults in materials or workmanship, CELTIPOL will repair or replace (at CELTIPOL's discretion) the product or its faulty parts, under the conditions specified below and without any charge for workmanship or parts. CELTIPOL reserves the right (at its sole discretion) to replace components of faulty products or to replace low-cost products with new or recycled products, in accordance with the laws of each country.

Conditions:

1. This guarantee is valid only when presented with the original invoice or sales receipt (indicating the date of sale and model purchased) along with the faulty product. CELTIPOL reserves the right not to offer the free guarantee service if these documents are not presented or if the information they contain is incomplete or illegible.

2. This guarantee does not cover or pay for damages resulting from changes or adjustments that may be made to the product, without the prior written consent of CELTIPOL in order to comply with safety or technical standards, national or local, in countries other than those for which the product has been designed and manufactured.

3. This guarantee shall not apply if the serial number of the product has been altered, deleted, has disappeared or is illegible.

4. This guarantee does not cover any of the following:

a. **Regular maintenance and repair or replacement of parts resulting from normal wear and tear.**
b. **Damage resulting from misuse, Including:**

- **Failure to use the product for purposes other than those for which it is designed or failure to comply with CELTIPOL's instructions for use and maintenance.**
- **Installation or use of the product in a manner that does not comply with the technical or safety regulations of the country where used.**
- **Repairs carried out by a non-authorized technical service or by the consumer.**
- **Accidents, lightning, water, fire, inadequate ventilation or any cause beyond the control of CELTIPOL.**
- **Electronic components (inside the control panel) affected by bad connections or sudden voltage changes (electrical fluid deficiencies).**
- **Faults of the system to which this product is incorporated.**
- **This guarantee has no influence whatsoever on the legal rights of the consumer granted by the applicable national legislation, nor on the rights of the consumer vis-à-vis the distributor deriving from the purchase/sale contract established between the two.**

30. CE DECLARATION.

Ec declaration of conformity

According to Appendix II, No.1 A of the Machinery Directive 2006/42/CE

The company: **CELTIPOL S.L.**

C/ Faustino Santalices, 35

32840 Bande – Ourense-Galicia

SPAIN

Declares that the equipments types: **CHL-400**

With Serial-No.:

Are in conformance with the provisions of the above-mentioned directive.

CELTIPOL, S. L.
CIF B - 32.207.062
Faustino Santalices, 35
32840 BANDE (Ourense)

Bande, 05.03.2021
Place, Date

José Torres Ambrosio
Manager

CELTIPOL

Faustino Santalices, 35
32840 Bande
Ourense (España)
E-mail: info@celtipol.com
Telf.: (34) 988 443 105
Fax: (34) 988 444 410

www.celtipol.es

Fabricado en España
Made in Spain